Steam Systems for Advanced Users

Engineering Data for Steam Processes and Heating systems

Bill Jefferson

Preface

Steam from the late 1800's to the mid 1960's was the choice of heating for most industrial building and the main media used in process manufacturing. It was widely used in the industrial revolution as a means of propulsion driving large generators producing electricity, driving turbine engines, which turned the wheels that operated production lathes, cutting tools, conveyers in industrial plants. Steam, had been economically produced in a central area and distributed to users by using a network of underground pipes. Steam drove the propellers of the shipping industry and was experimentally used as the media in the first designs of the automobiles, until Henry Ford refined the gasoline engine. The steam locomotive trains opened the frontiers of both Canada and the United States. In many cases, steam was the choice for heating small residential homes in the northern and eastern part of the United States. In Canada, the smaller residential homes used more wood and coal as a source of heating but for homes and buildings in high-populated areas close to the Canadian and United States border steam was the choice preferred.

Neil Armstrong and Buzz Aldrin of the Apollo 11 walked on the moon in 1969; from that date forward man's ideas, thinking processes and technology changed at an accelerated rate. There was a rapid development of new ideas and concepts, people needed to change. The trend to use steam as a total package also changed. Today we utilize steam and heat exchangers to heat water; circulating pumps, pump the hot water throughout the building and return the cooler water to the heat exchanger to repeat the process. The choice now for industrial heating is a more economical roof top unit using natural gas.

With changing times and a definite reduction in steam usage, the working fields are becoming smaller. The population of certified steamfitters, stationary engineers, and design engineers with the knowledge base to design and build are becoming smaller. The principal's and techniques remain the same and with this advanced course, the reader will be able to learn these fundamentals of steam.

Table of Contents

STEAM HEATING SYSTEMS 8
One-Pipe Gravity System *9*
One-Pipe Vapour System *10*
Two-Pipe Gravity System *11*
Two-Pipe Pressure System *11*
Two-Pipe Vapour System *13*
Two-Pipe Vacuum System *13*
Supply Piping *17*
Central Systems and Unit Systems *17*

CHAPTER 2 19

HEATING EQUIPMENT 19
Blast Coils *19*
Radiators *24*
Convectors *27*
Baseboard Units *27*
Extended Surface-Heating Elements or Finned Tube Units. *28*
Unit Heaters *28*
Cabinet Unit Heaters *30*
Unit Ventilators *31*
Other Types of Heating Equipment *31*

CHAPTER 3 32

SIZING STEAM TRAPS FOR HEATING EQUIPMENT 32
HOT WATER HEATING SYSTEMS 33
STEAM ABSORPTION UNITS FOR COOLING 34
STEAM FOR PROCESS WORK 36
WHAT STEAM PRESSURE SHOULD WE USE? 36
USES OF PROCESS STEAM 39
Steam Trap Sizing for Coil-Heated Tanks. *41*

CHAPTER 4 44

Log Mean Temperature Difference *44*
Installation of Heating Coils *46*
Designing Pipe Coils *49*
STEAM FOR WATER HEATING. WASHING, LAUNDRIES, TEXTILE MILLS, ETC. 53
Instantaneous Water Heaters *54*
Storage Water Heaters *62*

CHAPTER 5 68

AIR HEATING 68
EVAPORATION 70
DISTILLATION 71
STEAM-TO-STEAM GENERATORS 73
OPEN-TYPE EVAPORATORS 74
CLOSED TYPE EVAPORATORS 75
FILM EVAPORATORS 75
INDUSTRIAL DRYING 78
PAPER MACHINES 78

Textile Drying Cans 80
Rotary Dryers 80
Calendars and Ironers 81

CHAPTER 6 85

Cooking with Steam 85
Batch Type Canning Retorts 85
Continuous Type Canning Retorts 87
Coil-heated Canning Retorts 87
Open Type Rubber Vulcanizers 88
Fixed "non-tilting" Production Kettles 91
Quick-Boiling Kettles 92
Presses 95
Small Presses 95
Large Presses - such as those used for rubber and plywood 96
Water Cooling of Presses 97

CHAPTER 7 98

Steam for Power 98
Reciprocating Steam Engines 99
Steam Turbines 100
Condensation in Engine Cylinders and Turbine Casings 101
Steam Turbine Drainage 103
Condensation in Steam Supply Mains 103
Supply Mains to Reciprocating Engines 103
Valve Chests 104
Supply Mains to Steam Turbines 104
Steam Distribution 105
Steam Main Drainage 105
Water Hammer 105
Collecting Legs 108
Steam Trap Selection 109
Installation 110
Parallel Trapping 111
Priming Load 111
Air Venting 112
Safety Factors 113
Thermostatic Steam Traps 116
Liquid Expansion Thermostatic Traps 117
Float-Thermostatic Traps 117
Inverted Bucket Traps 118
Thermodynamic Traps 119

TABLE OF CONTENTS 123

TABLE OF FIGURES 124

TABLES 125

ADVANCED STEAM COURSE

I trust that after reading the elementary steam book you are convinced that anyone setting out to select a steam trap for a particular application must know more than just the size of the pipe to which he will attach the trap. He must know the characteristics of the various types of traps and he must match these characteristics to the requirements of the job at hand. He must also ensure that the condensate can flow unimpeded to the trap and he should consider the effect which his trapping methods will have on the performance of the system as a whole.

In the chapters to follow, we will consider some specific trapping applications, and we will try to pass on some of the tricks of the trade which we at Steam Specialty Sales have picked up over the years.

In writing this advanced book, we have assumed that the reader will have digested the material covered in the first simplified course, and we feel that we can deal with subjects that are a bit more complex. Since we propose to consider specific equipment and applications, some portions of the course may not be of direct concern to some of our readers. However, we will try to keep to material, which will be of general interest.

The table of contents and an alphabetical index will give a general idea of the layout of the course.

STEAM HEATING SYSTEMS

In recent years, houses and small buildings show fewer steam heating systems installed; however, larger buildings and industrial plants still frequently use steam. We do not propose here to argue the relative merits of steam versus hot water or forced hot air for heating. We will only comment that each method has definite advantages and the choice of heating medium depends on a careful consideration of each individual application.

Stripped to its bare essentials, a steam heating system consists of: some method of producing steam (boiler), a means of carrying this steam to locations where it is to be used (piping) and equipment which can use the steam to heat the building efficiently (heaters of one kind or another). There may or may not be separate piping to carry the condensate back to the boiler. Since this course is concerned primarily with steam systems, we will not discuss boilers in detail - this really is a subject in itself.

There are several different types of steam heating systems still in use, and it is always rather difficult to decide on some logical way of sorting the various systems into definite groups. Probably the simplest way is to divide them into one-pipe systems and two-pipe systems.

In a one-pipe system, steam and condensate travel in the same main and there is usually only one pipe connected to each heating unit so that in at least some of the piping, steam and condensate are traveling in opposite directions. In a two-pipe system, steam and condensate travel in separate pipes and there are two connections to each heating unit the steam inlet connection and the condensate connection.

These two main groups can be broken down further according to the method of returning condensate and the operating pressure.

One-Pipe Gravity System

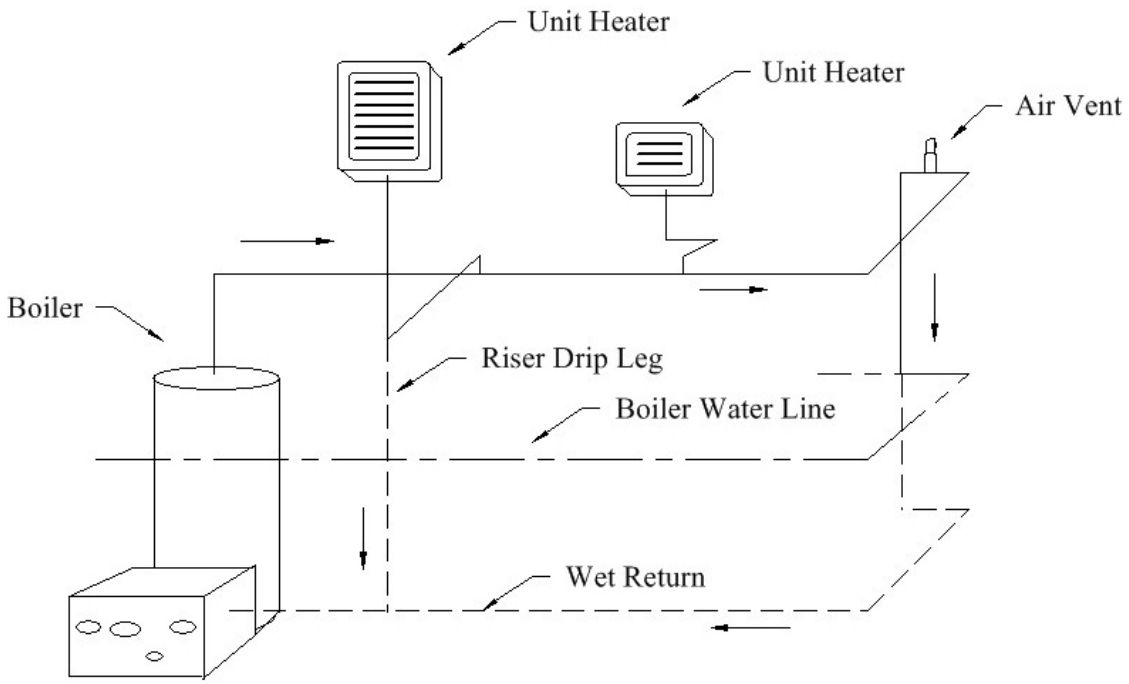

Fig. 1 One - Pipe Gravity System

As is shown in Fig.1, steam flows from the supply main to each heater. The steam condenses in the heating unit and the condensate flows out through the same pipe that delivered the steam. When the condensate reaches the supply main, it runs in the same directions as the steam to the end of the main where it drops by gravity into the “wet return”.

In some cases, risers connect directly to the wet return so the condensate running down the riser does not need to travel all the way to the end of the main before it enters the return line. Since steam and condensate are flowing in the same pipe, in opposite directions, you must carefully size the pipe, to avoid any water hammer.

Although this system does not require steam traps, you must install a thermostatic air vent to each heating unit to prevent air locking; also, install a heavy-duty air vent at the end of the supply main where it drops to the wet return. Each unit has an isolation valve installed on the inlet, but must not be used to control the amount of steam supplied to the unit. Use these valves to shut off the steam supply to the equipment only if the particular unit needs servicing or if heat is not required from the unit. If the valve is partially closed, condensate will remain in the unit causing either water hammer and or corrosion problems. By the way, valves must be either angle or gate type. If an ordinary globe valve, installation must be on its side; otherwise, the seat would interfere with the flow of condensate from the steam space.

One-Pipe Vapour System

The piping layout is the same as for the one-pipe gravity system except that the air vents have a small check valve, which prevents air from re-entering the system once discharged. This means that under certain conditions, the system will operate at or below atmospheric pressure, this will happen, of course, when steam is condensing in the units more quickly than it is being supplied.

The advantage of this sub-atmospheric operation is that during periods of light load on the boiler when not much steam is being produced, the pressure in the heating units may drop to as low as 10 psia that is, about 5 psi below atmospheric pressure. Since the temperature of the steam depends on its pressure, the temperature of the heating units will also drop and their heat output will decrease. For this reason, the Vapour System will keep more uniform room temperatures than the ordinary gravity system.

In general, in small buildings where the cost of installation will be lower one-pipe systems are used. In a large building, the initial cost will probably be higher than that of a two-pipe system because of the need for much larger pipes, since the steam and condensate must flow through the same main. Another disadvantage of the one-pipe system is that it is very difficult to control the room temperature accurately.

One-pipe systems are rare nowadays except in old residential heating. Even there, their use seems to be dying out.

Two-Pipe Gravity System

In this system, there is a separate supply and return pipe to each heating unit. No steam traps are used, and the individual return lines lead directly to the wet return. This system has all of the disadvantages of the one-pipe gravity system and is now obsolete although in older buildings you may still see this system. Newer installations would never use a two-pipe gravity system.

In the old days when steam traps were much larger, more expensive, and less reliable than they are today, there may have been some advantage to using a gravity system, which did not require steam traps. Now, however, it is much less expensive to use a conventional pressure system with a steam trap on each unit and smaller return piping.

Two-Pipe Pressure System

This and the two-pipe vapour system are by far the most common means of steam heating. “High pressure” systems use steam above 15 psig and “low pressure” systems use steam from 0 to 15 psig. This distinction is purely a matter of convenience; the only difference in the piping layout is that in a high-pressure system the condensate can lift higher to an overhead return main.

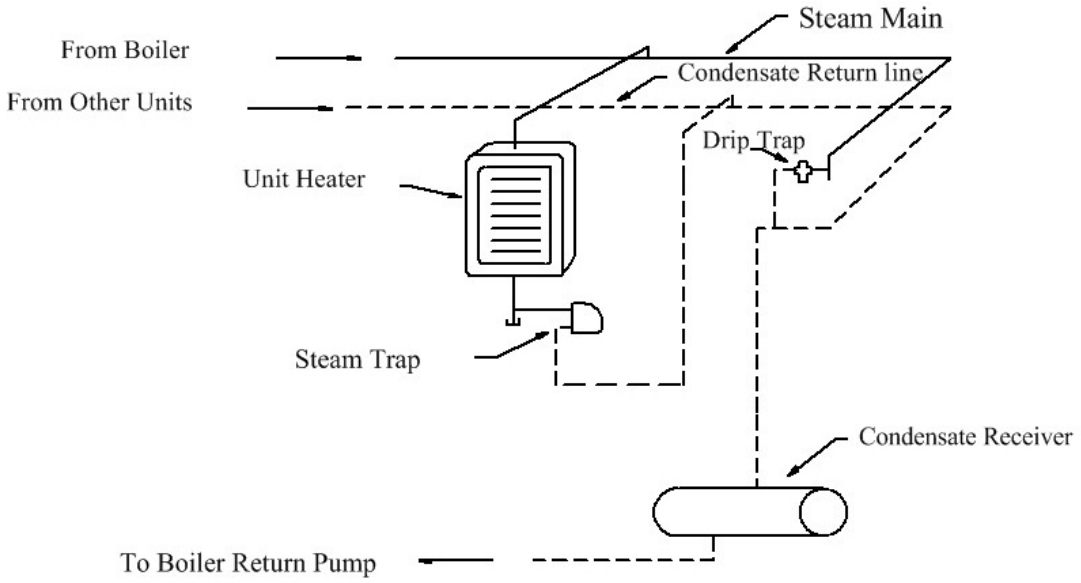

Fig. 2 Two - Pipe Pressure System

The pressure system is mainly in large industrial buildings which are equipped with unit heaters or large heating coils, or in which high-pressure steam is required for process work. When generating steam for heating purposes only, usually the vapour or vacuum system is used.

This might be a good point to discuss briefly - the reason for selecting as low a steam pressure as possible for a heating system.

If the heating units (radiators, for example) operate at too high a temperature, some areas of the room will be uncomfortably hot. For instance, a radiator, with supply steam at 100 psig, will have a surface temperature of about 330 F. Even though this radiator is correctly sized to supply the required amount of heat to the room, the effect would be as if the occupant of the room were standing in front of a blazing fire; his front would be very hot and his back would be cold.

On the other hand, if steam at atmospheric pressure is supplied to the radiator, the surface temperature will be somewhere around 210 F, so that although a larger radiator must be used to heat the same sized room, the heating effect would be much more uniform.

The same thing is true for a system using, for instance, unit heaters. A unit heater running on high-pressure steam will blow air at an uncomfortably high temperature. Hot air blown into a room for heating purposes, either through ducts or by a unit heater, should be 50 or 60 F higher than the room temperature. If the air is hotter than this, there will be complaints of hot air currents in the room and the occupants will probably be very uncomfortable.

Another excellent reason for not overheating the air passing through any type of heating equipment is, being that warm air is less dense, i.e. “lighter” than cool air, the hotter outlet air will bounce directly to the ceiling and stay there, contributing very little to the comfort of the room occupants.

Heating equipment, is mostly, designed for use with steam at about 2 psig. If a higher steam pressure is used, we will run into the trouble mentioned above.

Another reason for using a low steam pressure is, as we mentioned in the elementary course, it is the Latent Heat of the steam, which is important since it is the Latent Heat that is given up when the steam condenses.

Low-pressure steam has a greater amount of Latent Heat per pound than high-pressure steam.

Thus, we have here two advantages; low-pressure steam will heat more uniformly and efficiently, and it contains more Latent Heat per pound. Another possible advantage, which could be quite important in most cases, is that low-pressure steam usually costs less to generate.

Of course, lower steam pressures require larger pipes and larger heating units, since the volume of steam per pound is greater at lower pressures. For instance, at atmospheric pressure, zero psig, one pound of steam occupies 26.8 cubic feet; at 100 psig, one pound of steam occupies only 3.8 cubic feet. Thus, at higher pressures more steam can be crammed into a space of a given size.

Although each installation requires separate judging, it is usually less expensive in the end to use larger equipment and larger pipes that can accommodate low-pressure steam. The system will be less expensive to operate and it will run more efficiently.

Two-Pipe Vapour System

The basic difference between the two-pipe vapour system and the two-pipe low-pressure system is the air vents in the vapour system contain a built-in check valve, which prevents expelled air from re-entering the system. Thus, it is possible for the system to operate considerably below atmospheric pressure under conditions of low heat requirements and low fire or during periods of intermittent firing. This lower pressure will, of course, reduce the heat output of the heating units and, in effect, the temperature control will be much more gradual and the result will be a more even heat distribution.

Two-Pipe Vacuum System

Before we discuss the details of this system, we should perhaps spend some time looking at vacuums in general.

So far, in this course we have considered only steam at above atmospheric pressure, that is, above 0 psig or 14.7 psia. However, heating with steam, which is actually below atmospheric pressure, is quite common. Many people fail to understand the workings of a vacuum system because they are in the habit of thinking of a vacuum as “suction”. If we engineer a heating system in terms of pressures above absolute zero pressure, for example think of psia. instead of psig, most of the apparent difficulties will disappear.

No matter whether the system works at a pressure above or below atmospheric, there must be a pressure difference between the inlet and outlet of the steam trap on each heating unit, which will cause the condensate to discharge into the return piping.

If the pressure in the heater is above atmospheric, the trap will discharge condensate to an atmospheric pressure return system. This is a result of the higher pressure in the heater.

If the pressure in the heater is equal to or less than atmospheric pressure, the pressure in the return line must be below atmospheric if the trap is to discharge condensate properly. That is, the return line must have sub-atmospheric pressure created in it by some means. To create this sub-atmospheric pressure, connect the return piping to a pump or by other means, remove the condensate to the boiler or to a receiver at atmospheric pressure.

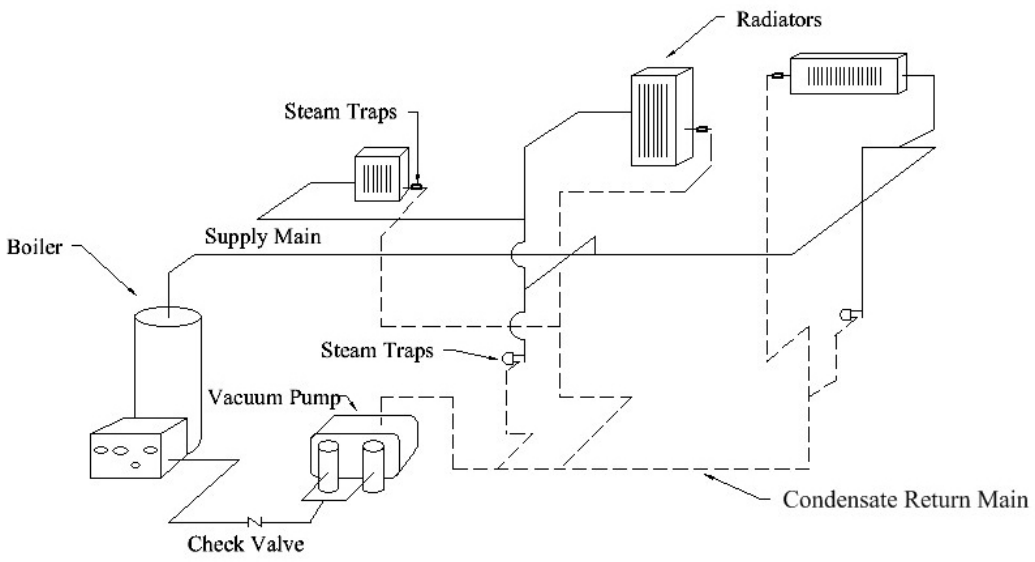

Fig. 3 Two - Pipe Vacuum System

As we indicated earlier, if a heating system works on steam as the heating medium, the surface temperature of the heaters will be almost at steam temperature. It follows that the higher the steam pressure, the higher the surface temperature. Even if the steam pressure is only atmospheric, O psig, the surface temperature will be almost 212° F. In some cases, this is undesirable.

For example, radiators in hospitals or schools where there is a danger of burning patients or children should have as low a surface temperature as possible.

In any case, it is an advantage with direct heating of this type (i.e. radiators) to avoid an excessive difference in temperature between the radiating surface and the surrounding air.

Therefore, to reduce the surface temperature as much as possible, it is sometimes necessary to supply steam at below atmospheric pressure. In addition, this, of course, involves the use of a vacuum return system.

Even when the supply steam pressure is at or slightly above atmospheric, the steam in remote parts of an extensive piping system may be at so low a pressure that it would be unable to overcome the resistance of the return piping, particularly if the condensate lifts to an overhead return. In such cases, we control the return line under a vacuum in order to produce the required pressure differential across the steam traps.

Remember that a pressure difference is required in order to produce a flow of either steam or condensate. Pressure difference is of great importance, as it simplifies the problems of steam supply and condensate return in vacuum systems. One important point to remember is, the height to which condensate can lift depends on the actual pressure at the point where the condensate rising pipe is connected.

For example, a heating system may be supplied with steam at 2 psig, 16.7 psia and the return line vacuum at the pump maintained at 10 inches of mercury equal to a pressure of 9.75 psia as explained in chapter 1 in the Elementary book. Between the boiler and the vacuum pump there will then exist a pressure difference of 6.95 psi, i.e. 16.7 - 9.75 = 6.95. If, however, there is a pressure drop in the steam supply and radiator at the most remote point of the system of 1 psi, and also a pressure loss due to the resistance in the return line of 1 psi, the pressure difference between the radiator and the return line <u>at the trap</u> will be only 4.95 psia. As shown in Fig. 4.

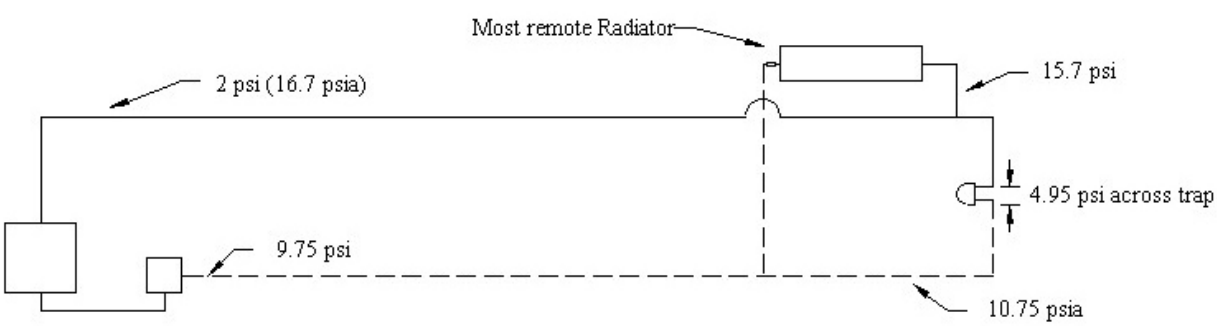

Fig. 4 Pressure Differential

Now, under these conditions, the pressure across the trap, if correctly sized will be sufficient to force the condensate through the trap. However, it would be useless to expect the system to work if there were a lift of say 12 feet after the trap. In this case the lift itself would need a pressure difference of 12/2 =6 psi to overcome the pressure of the water in the rising pipe.

The above example illustrates the importance of considering these problems in terms of pressure and pressure difference so to avoid thinking of "suction".

As shown in Fig. 4, the vacuum system makes use of a pump in the return line, which ensures the maintenance of sub-atmospheric pressures in the return piping for all operating conditions. The pump thus assists the supply steam in overcoming the resistance of the steam piping and ensures rapid steam circulation and even heating. If the steam in the heating units condenses more quickly than the boiler generates, the system may operate for short periods with sub-atmospheric pressures in the supply piping.

The vacuum pump withdraws both air and water from the return system. It separates the air from the water, expels the air to atmosphere, and pumps the water back to the boiler. It is particularly essential in this type of system that there is no connection made from the steam supply side to the return side at any point except through a steam trap. Such a connection would destroy the vacuum in the return piping.

It is important to check that the steam traps are suitable for use on a vacuum system. Frequently used are thermostatic steam traps that can operate under vacuum conditions, as they an excellent choice. Most bi-metallic traps and some bellows-type thermostatic traps are not suitable.

Avoid any lifts in the return system if possible. However, if it is necessary to lift the condensate main, use a lift fitting in the piping connections. These lift fittings may either be made from pipefittings, or purchased as a unit. Do not lift the condensate more than about 6 feet in one-step. If this is unavoidable, use a series of steps, otherwise the vacuum present in the return line will cause the condensate to flash into steam. The lift fitting, in effect, forms a trap at the bottom of the lift and ensures that the rising pipe will remain filled with water.

We have attempted in the foregoing paragraphs to give a very brief outline of the various types of steam heating systems in common use.

Virtually all steam heating systems installed today are one of the last three types considered; that is: two-pipe pressure systems, two-pipe vapour systems or two-pipe vacuum systems and also, of course, any of the several modifications of these systems.

All of these systems require steam traps on each piece of heating equipment. The next section of the course will deal in some detail with the correct method of trapping several of the more common types of heating equipment.

In a course of this kind, it is impossible to give a complete analysis of each type of heating system. If anyone would like a more detailed explanation of any of the points covered so far, we will be happy to supply it.

HEATING SYSTEM DETAILS

Supply Piping

In general, steam supply piping should slope away from the boiler toward the far end of the line where, installed properly, there is a steam trap. Install steam traps at any point where condensate can collect such as any vertical lift, a low spot in the steam main or as a rule every 100 foot of steam main run. We shall discuss the entire subject of steam distribution piping in detail later in the course.

Central Systems and Unit Systems

Most large buildings, and many small ones, use a “central system” to heat, in which the air is processed i.e. heated, cooled, filtered, etc. at some central location in the building, and distributed in sheet metal ducts to the various rooms. One or more large steam coils, located in the ductwork, heat the air.

A “unit system” on the other hand makes use of individual heating units located in each room and supplied with steam through a piping system. These units may be radiators, convectors, unit heaters, etc.

In the central system, warm air moves through the building by means of ductwork and blower fans. In the unit system, steam or hot water distributes in pipes throughout the building, and convection air flows within each room.

The primary advantage to using a central system is that by adding a cooling coil in the ductwork, air conditioning can be included relatively easily and the air can be filtered, humidified or dehumidified, etc. at one central location.

Unit systems have the advantage of flexibility. Units are individually controllable so that different rooms can maintain different temperatures, or the units in unused areas can shut off completely. It is also relatively easy to add or subtract units or change the system layout when required.

Chapter 2

Heating Equipment

In this chapter, we will consider in detail some of the more common types of heating units. Some equipment uses either steam or hot water as the heating medium, but we will examine only steam applications.

Blast Coils

“Blast coils” are the large heating coils used in central heating systems. These are generally in the form of copper pipes with aluminum fins bonded onto them, usually rectangular in shape and a few inches thick. The length and width of these coils are very large, in many cases several feet.

In some central systems the air is heated in more than one stage, so that we have a “preheat coil” which raises the air to above freezing (usually 40 to 50 F), and a “re-heat” coil which is thermostatically controlled to raise the air to the final temperature desired.

Blast coils should always be fitted with a float-thermostatic steam trap and a separate vacuum breaker in order for the condensate to drain away as quickly as it forms. This will ensure that at no time, any of the coils are waterlogged and the entire heating surface is always utilized (Fig. 5).

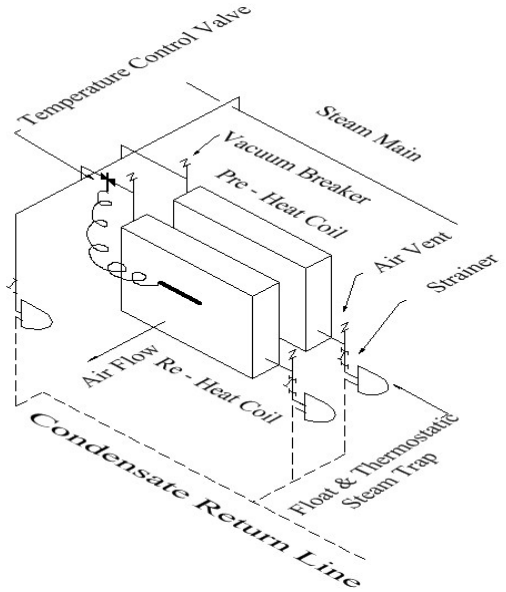

Fig. 5 Blast Coils

In some cases, for very large ducts, the installation of blast coils in the same duct is parallel (i.e. side by side). In such an installation, each coil should have its own steam trap. If all the coils drain through a single steam trap, we will have a “group trapping” situation. We have learned that this is very inefficient and by using this method, steam locking could occur which will back up condensate eventually freezing the coils.

In many installations blast coils must heat outdoor air which may be passing over the coil at temperatures as low as 20 or 30 degrees below zero. In certain circumstances, even when properly trapping the coil, there is a danger that some tubes of the coil will collect condensate, which will freeze by the sub-zero temperatures. The discharge capacity of a steam trap, as you know, depends among other things on the differential pressure between the trap inlet and outlet. If there is no pressure difference, the trap cannot discharge condensate. If the pressure on the trap inlet is lower than on the outlet, condensate can draw back into the coil from the return main.

If a temperature control valve regulates the steam supply to the coil or if a hand valve controls the steam supply, the steam pressure in the coil may at times be reduced to atmospheric pressure or even lower. Under these conditions, the water held in the coil will freeze if the temperature of the air passing over the coil is lower than 32° F.

How can such a condition of no pressure differential or a negative differential arise? Take as an example a coil designed to heat air from 0° F to 50° F using steam at a pressure of 10 psig.

The fact that air is coming to the coil at 0° F and is leaving the coil at only 50° F - still too cool to be introduced directly into a room - would lead us to believe that we have here a “pre-heat” coil of the type which we described earlier. A temperature control valve, which varies the steam pressure inside the coil, constantly maintains the temperature of the air leaving the coil at 50° F, no matter what the temperature of the incoming air.

You will remember from our discussion in the first course that as the steam pressure decreases, the temperature of the steam also decreases. The coil in the present example has been designed to heat air from 0° F to 50° F using 10 psig steam. When the outside air temperature and therefore the temperature of the air entering the coil rises above 0° F, not as much heat is required to raise it to 50° F. The temperature control valve, is regulated by a thermostat located in the air stream leaving the coil, then allows for the decreased heat demand by closing slightly reducing the steam pressure to the coil. Chart, Fig. 6 shows how the steam pressure in the coil will decrease as the outside air temperature increases.

When the outside temperature is 0° F, the pressure in the coil must be 10 psig - since this is the basis of coil design. This will give us the point at the left hand side of the chart.

When the temperature outside is 50° F, the coil is not required to heat the air at all. Thus, the pressure in the coil must reduce to 0.178 psia (corresponding to a steam temperature of 50° F) since otherwise; there would be some heat transfer from the coil. This will give us the point at the right hand side of the chart. If we now join these two points with a straight line, we will have an indication of the steam pressure in the coil corresponding to any steam pressure between 0° F and 50° F.

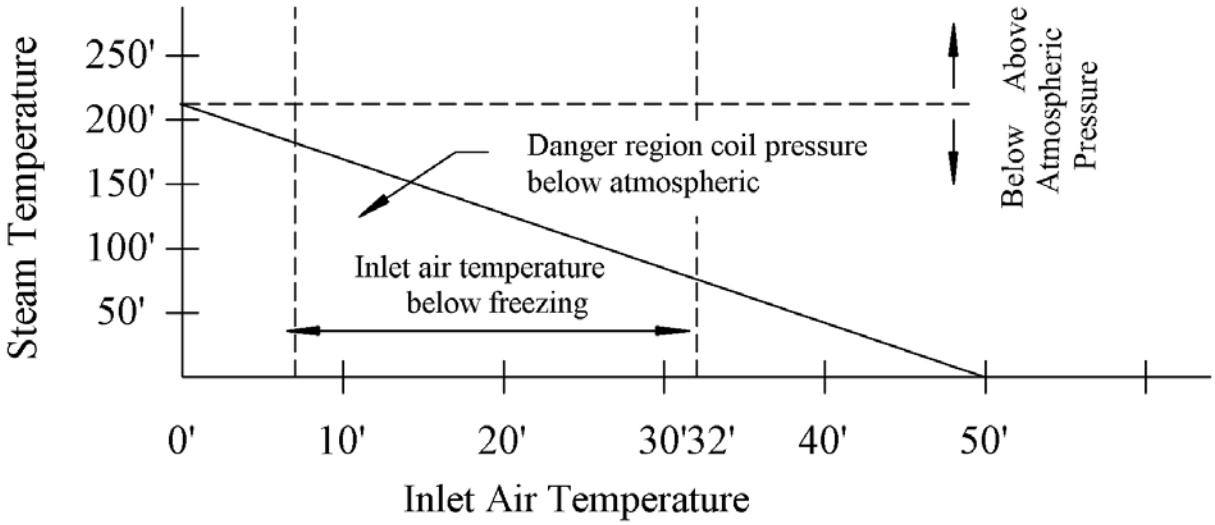

Fig. 6 The Danger Zone

Note that when the outside air temperature reaches 7 F the pressure in the coil is 0 psig. In other words, there is no pressure difference across the steam trap and the condensate cannot discharge. The coils will then start to waterlog and the sub-zero air passing over the coil will freeze the trapped condensate.

The drawing of this chart was for the specific case mentioned above. If you run into this problem frequently, please let us know and we will send you information which will enable you to draw a chart for your own set of conditions to determine the danger point as which the coil will freeze.
To accomplish the hindrance of blast coil freeze-ups follow one of the following steps. The cure is obviously to prevent the pressure differential across the trap from falling below the minimum required to discharge all of the condensate as quickly as it forms. Some methods are as follows:

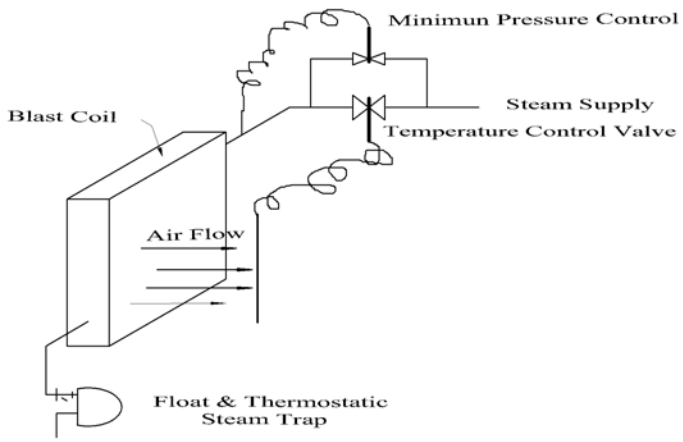

Fig. 7 Pressure Controlled By-pass

(I) Arrange a pressure-controlled by-pass around the temperature control valve. See Fig. 7. This by-pass will prevent the pressure in the coil from falling below a preset minimum, but it also prevents the control valve from being effective over the full range of outside air temperatures. This will mean that the temperature of the air leaving the coil will sometimes be greater than the desired 50° F.

(II) Install the steam trap well below the coil to provide a hydraulic leg which would enable the trap to discharge even with a vacuum in the steam space. The length of the leg must be such that the heat (i.e. pressure) on the trap is sufficient to give ample discharge capacity with atmospheric pressure in the heater. See Figure 8.

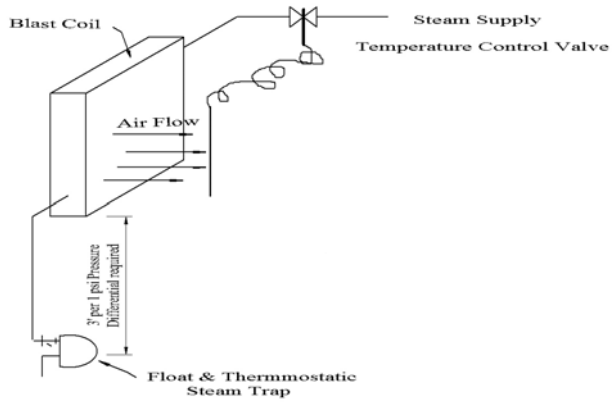

Fig. 8 Coil Trapping Method

Install a properly sized vacuum breaker at the top of the condensate header of the coil. This vacuum breaker could be in the form of a light reversed check valve, or a small thermostatic radiator steam trap. For calculation of the hydraulic leg required, use a figure of 3 feet per psi pressure differential.

For example, if the trap has the required discharge capacity at a pressure differential of 1 psi, the minimum head should be 3 feet. This is the simplest method of preventing coil freeze-up providing that there is room enough to install a sufficiently long hydraulic leg.

(III) On a new installation, consider dividing the pre-heater into two sections. See Fig. 9.

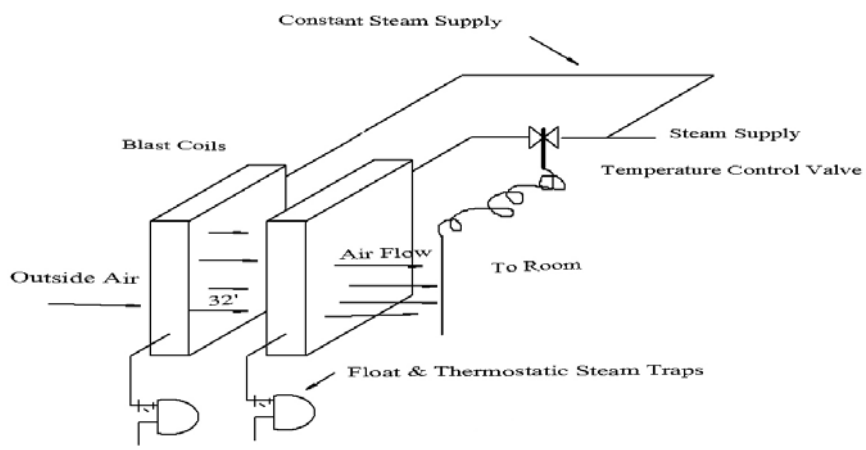

Fig. 9 Pre Heater

The first section should be capable of raising the temperature of the outdoor air to at least 32° F from the lowest outdoor temperature expected. The second coil will raise the air from 32° F to the final temperature at which the air is to enter into the room. Control the reheat coil by a temperature-regulating valve, which will maintain a constant final temperature. By this means, the first coil could not freeze because of the steadily maintained steam pressure, and the second coil could not freeze because the minimum temperature of the air passing over it would always be above freezing. Here again of course, each coil should be trapped separately with a float-thermostatic steam trap.

The amount of condensate produced by a blast coil can be calculated easily if the CFM (that is, the cubic feet of air passing over the coil per minute) and the temperature rise of the air as it passes over the coil are known.

The formula is:

$$\text{Condensate load} = \frac{\text{CFM x 1.08 x temperature rise}}{\text{Latent heat of steam}}$$

This formula will give us the actual condensate load on the trap. In selecting the trap, an appropriate safety factor is applied. We will consider safety factors in detail later in the course.

By the way, apply this same formula to any piece of equipment, which raises the temperature of air, and if the amount of air (CFM) and temperature rise are known.

Radiators

The old type of cast iron radiator once so common is now very seldom used. However, a great number are still in use. For this reason, it is important that we know how to size traps for them (most cast iron radiators seem to last longer than most radiator traps).

Originally, we used the actual surface area of the cast iron radiators to calculate the amount of available heat. That is, if a radiator had a certain number of square feet of surface area we assumed that the heat output would be a specific amount. Surprisingly enough, this system worked pretty well so long as the radiators were not too complicated. However, as radiators and other types of heating equipment became more intricate, the area of the heating surface no longer bore any direct relationship to the heat output.

For this reason, the powers to be, decided to use the equivalent square feet of steam radiation surface as the standard to rate heat on radiators. The "sq.ft. EDR" (that is, square feet of equivalent direct radiation) was defined as the amount of heating surface which will emit 240 BTU/hr with a steam temperature of 215° F and a room air temperature of 70 F. For some types of heating equipment, (eg. convectors, baseboard heaters, etc.) the room temperature used in the above definition is 65° F instead of 70° F. The significance of this different temperature will be discussed when we look at the other types of equipment.

To a person not familiar with this rating system and even to some of us who are familiar with it, the whole thing seems very confused. The habit of thinking in terms of EDR is actually dying out, and the manufacturers of most heating equipment now give heat output ratings directly in terms of BTU/hr. However, we use EDR with some radiators and convectors so let us make an effort to understand this system. Perhaps some examples may help. If a radiator running on steam at 1 psig is supplying 720 BTU/hr to a room at 70° F, we can say that its rating is 3 EDR (sq. ft. EDR is usually shortened to simply EDR). Note that steam at 1 psig has a temperature of 215° F.

If altering the steam pressure or air temperatures, the number of BTU's per hour corresponding to one EDR changes. That is, a radiator rated at 1 EDR supplied with steam at the higher pressure than 1 psig will produce more than 240 BTU/hr. In the table below, multiply the factors by the EDR rating for various steam pressures and room temperatures.

Table 1 Correction Factors

Steam Pressure psig	Room Temperature In Fahrenheit					
	50	55	60	65	70	75
1	1.25	1.14	1.09	1.04	1.00	.953
6	1.32	1.28	1.23	1.18	1.14	1.09
15	1.52.	1.47	1.43	1.37	1.32	1.28
27	1.72	1.67	1.61	1.56	1.52	1.47

Correction Factors for Cast Iron Radiators for Various Steam Pressures and Room Temperatures.

<u>Example:</u> A radiator rating is at 14 EDR. What will be its heat output and how much condensate will be produced when it is operating on 1 psig steam in a room at 70° F?

From the table above, we see that the factor for 1 psig steam and 70° F is 1.00. These are the "standard conditions", under which the EDR is defined.

Therefore, the heat output is 14 x 240 = 3360 BTU/hr. Now, from the steam tables we find that the Latent Heat of 1 psig steam is 968 BTU/lb. The amount of steam, which the radiator will condense to produce 3360 BTU/hr, is therefore:

$$\frac{3360}{968} = 3.48 \text{ lb. /hr.}$$

The steam trap must be sized (with appropriate safety factor) to pass 3.48 pounds of condensate per hour.

<u>Example:</u> If the same radiator is supplied with 15 psig steam in a room at 75° F, what will be its heat output and condensate load?

The factor for these conditions is 1.29. The heat output will therefore be:

14 x 240 x 1.29 = 4340 BTU/hr. and, since 15 psig steam has a Latent Heat of 946 BTU/lb., the condensate load is:

$$\frac{4340}{946} = 4.58 \text{ lb./hr.}$$

The intention is not to take these examples too seriously as an indicating method of sizing steam traps for radiators. For most ordinary purposes, it is sufficient to remember that:

<u>4 EDR will produce 1 pound per hour of condensate</u>

Almost invariably, the trap used on radiators is a thermostatic radiator steam trap. Most manufacturers' catalogues list the number of EDR each radiator trap is capable of handling. If the capacity is in pounds of condensate per hour, this can convert to EDR by multiplying it by 4.

For example - a trap with a capacity of 50 pounds of condensate per hour will be able to handle 200 EDR. Typical piping connections are as shown in Fig. 10.

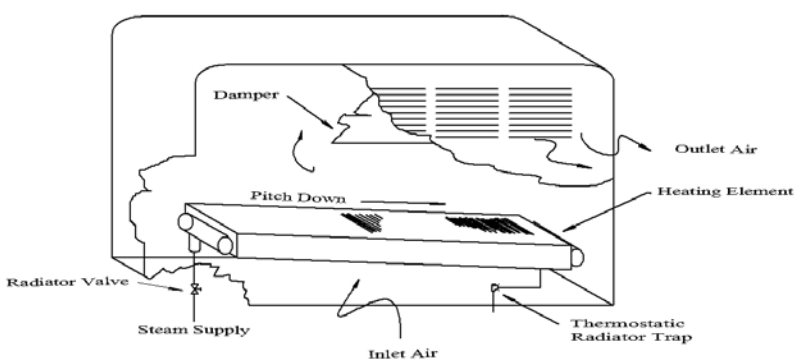

Fig. 10 Typical Convector

Convectors

Convectors come in various heights, lengths, and depths and may be freestanding, wall-hung or recessed into the wall. Today they replace the cast iron radiators, since they will impart some motion to the air and are more attractive. They are also usually smaller than cast-iron radiators for a given heat output.

Catalogue ratings for cast iron radiators, are almost invariably given in EDR. You will recall that "standard conditions" for a radiator are 215 F steam and a room temperature of 70 F. A radiator operates by radiating heat directly into a room, a temperature of 70 F is the most common room temperature, and therefore why it is the "standard condition". A convector, on the other hand, draws air from the floor of the room. When the temperature at the head level in a room is 70 F, the temperature at the floor is usually about 65 F. Therefore, standard conditions for a convector are 215 F steam and an entering air (that is, air entering the enclosure) temperature of 65 F.

As for cast iron radiators, any deviation from these standard conditions will mean that the EDR will be equivalent to more or less than 240 BTU/hr. The table in Table 1 is good only for cast iron radiators. Nevertheless, use the table for convectors but use an error of 1% or 2%.

Consider the above complications only when choosing a heating unit for a critical application. If we are concerned merely with sizing steam traps, it is of theoretical interest only; all we need to remember is that 4 EDR will produce one pound of condensate.

The heating element or core of a convector is usually made from copper tubes ½" or 5/8" in diameter running between headers at each end see Fig. 10 Aluminum fins pressed onto the tubes increase the heat transfer surface. Steam, is introduced to the header at one end of the core, and the removal of condensate is from the header at the other end. It is important that the core pitch downward toward the condensate header usually the steam end is about ½" higher than the condensate end. The trapping hook-up is the same as for cast iron radiators; a balanced pressure thermostatic radiator trap is usually used.

Baseboard Units

It is sometimes desirable, especially in houses and office buildings, etc. to use heating units that resemble conventional baseboards. For appearance, install them in continuous runs along the outside walls of the rooms. Two types are available:

1. Hollow cast iron or steel panels that operate largely by direct radiation like a conventional cast iron radiator, although sometimes air openings at the top and bottom of the panels permit circulation of room air.

2. Finned tubing mounted within a sheet metal enclosure or cover. This type operates almost completely by convection and is, in effect, a very low narrow convector mounted at floor level. The heating element is similar to that of a convector, except that it contains only a single tube. Two or more elements are sometimes "stacked" one above the other.

These two types of baseboard units are best suited for hot water heating systems. If used on steam systems, there is always the problem of obtaining enough pitch over such a long run to allow the condensate to flow properly toward the trap.
The manufacturers' instructions should be followed carefully; if too long a length is used at one time or if not enough pitch is provided, water hammer will almost certainly result. Use balanced pressure thermostatic radiator traps for baseboard radiation.

Extended Surface-Heating Elements or Finned Tube Units.

Another type of heating installation that is widely used for commercial and industrial applications consists of long sections of finned pipes installed under windows, along outside walls, under skylights, etc. The heating element is constructed using 1-1/4" pipe, with aluminum fins approximately 4" square spaced about ¼" apart. This type of installation is suitable for high or low-pressure steam systems or hot water. Sometimes, where appearance is a factor, the finned tube has a perforated metal shield or grilled enclosure.

Here again, efficient operation demands careful installation with all pipes pitched downward toward the trap so that the condensate may be removed quickly and the possibility of water hammer eliminated. We recommended following the manufacturer's installation instructions carefully.

Use a thermostatic radiator trap in most cases unless large capacities are required, in which case install a float-thermostatic trap.

Unit Heaters

Unit heaters consist of a heating element or coil with a fan, which blows air over the coil. There is usually some means of directing the air stream as it leaves the unit, and the entire assembly has some more-or-less decorative casing.

The most common type of unit heater has a propeller fan driven by a fractional horsepower motor, although some larger units may use a centrifugal blower. The heating medium may be stream or hot water, or the unit could be direct fired by gas or oil. Units containing electric heating elements are also available.

We will concern ourselves here with steam unit heaters only. Hot water heating systems use steam unit heaters, although some manufacturers' units are more efficient than others are. Very few manufacturers make separate units for steam and hot water.

Shown below are two of the more common types of unit heaters with the recommended piping hook-up.

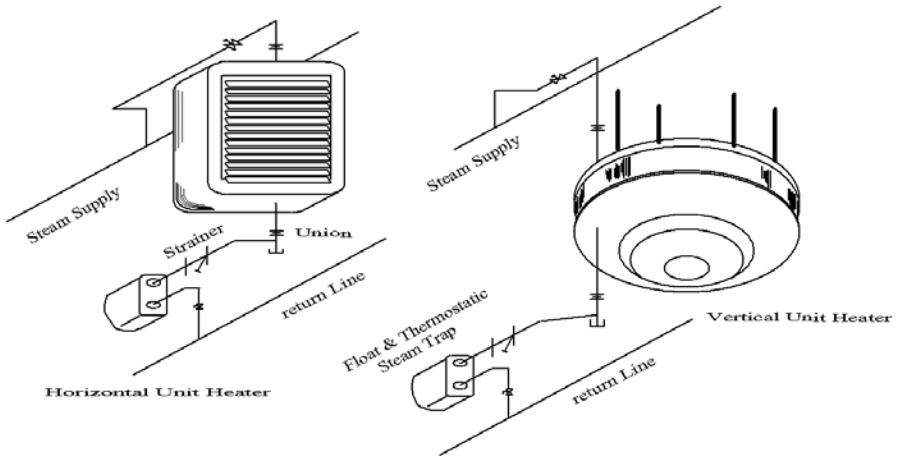

Fig. 11 Unit Heaters

The heating element of the unit heater is capable of condensing a great deal of steam even though the volume of steam present in the coil at any one time is comparatively small. For this reason, it is particularly important to remove condensate once it forms.

Depending on whether or not the fan is running, there is considerable variation in the rate of condensate formation. When the thermostat turns on the fan, the condensate load suddenly increases from almost zero to the full capacity of the unit. Therefore, it is necessary that the stream trap should be able to accommodate wide fluctuations in condensate load.

These conditions indicate that you should use a float-thermostatic trap. In fact, except for very small unit heaters, the float-thermostatic is the only satisfactory type of trap. If for any reason you install another type of steam trap, incorporate a large enough collecting leg before the trap in the piping system so that there is never any possibility of condensate being held in the steam coil itself. For instance, if you installed a bucket trap on the unit heater, during the time that the trap is closed, the steam coil would partially fill with condensate. It is possible for the condensate to back into the coil, which would waterlog the coil and the unit heater could blow cold air. Another problem that could arise when using a cycling trap such as a bucket or a thermostatic steam trap to drain a unit heater is that the repeated filling of the pipes in the steam coil with condensate adds to the danger of corrosion in the coil.

Unit heaters are mainly for industrial applications, but are becoming more common for heating small commercial buildings, shopping centers, stores, etc. A wall thermostat would most likely control the unit, which operates the fan when heat is required. The coil is constantly receiving steam.

Cabinet Unit Heaters

The cabinet unit heater (sometimes called a force-flow convector) is really a cross between a conventional suspended unit heater and a convector. It takes the form of a steam coil (or hot water coil) such as is used in an ordinary convector with the addition of centrifugal blowers which force air over the coil so that we have forced convection.

The fans mount below the coil so that air draws into the bottom of the unit; it then blows over the coil by the fan to discharge from the front or top of the unit.

Small cabinet units may if necessary, be fitted with the thermostatic radiator trap, but if space permits, a float-thermostatic trap should always be used. The reasons for this selection are the same as for the suspended unit heaters.

Most cabinet unit heaters have the steam inlet and outlet on the same end of the coil, so that all piping configurations are on one side of the cabinet. It is important, of course, that the outlet is always the lower of the two connections, so that condensate will drain into the trap.

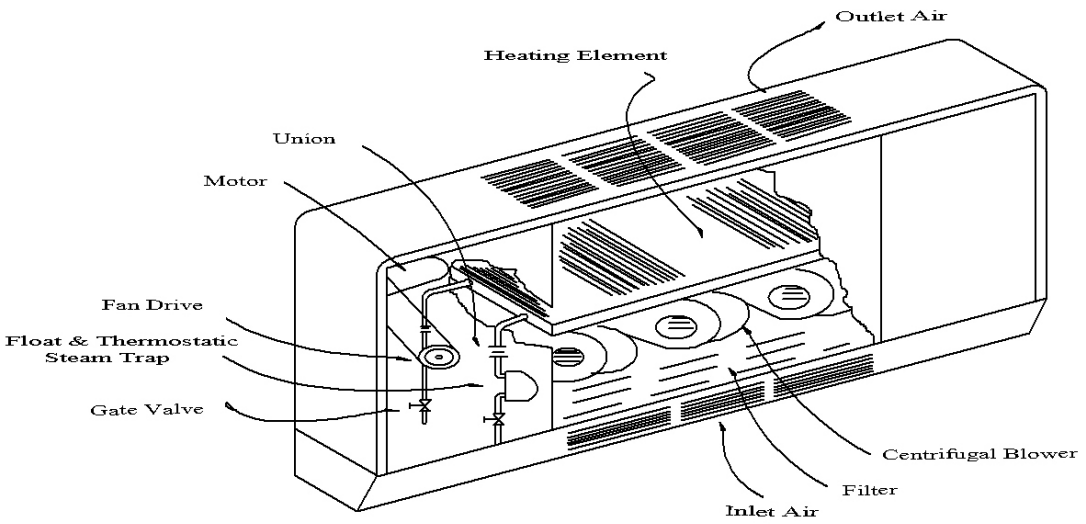

Fig. 12 Cabinet Unit Heater

Unit Ventilators

The unit ventilator is a rather specialized type of cabinet unit heater used mainly for schools and similar applications. These unit ventilators are capable of delivering a controlled amount of outdoor air and mixing it with air re-circulated from the room. Most unit ventilators have room within the cabinet for the installation of a float-thermostatic steam trap, which whenever possible should be used. Manufacturers of this equipment usually supply very specific installation instructions. Follow them carefully.

Other Types of Heating Equipment

In the foregoing paragraphs, we have tried to cover the more common types of unit heating equipment. There are, of course, many modifications of these types of equipment, which we have not mentioned at all. However, the basic principle of all steam heating equipment remains the same and, in general, efficient trapping calls for the use of thermostatic radiator traps for radiators, convectors, baseboard and finned tube; and float-thermostatic traps for blast coils, unit heaters, force-flow convectors, etc.

Chapter 3

Sizing Steam Traps for Heating Equipment

As we learned in the earlier course, when sizing steam traps it is very important to pass the required amount of condensate. However, it is sometimes difficult to determine the actual condensate load.

Manufacturer's catalogues sometimes give the precise amount of condensate produced by their units under various operating conditions. Since this is more the exception than the rule, we will try to give some methods for calculating condensate rates for heating equipment.

We have already mentioned the formula for obtaining the amount of condensate produced by a blast coil.

$$\text{That is condensate load} = \frac{\text{CFM x 1.08 x temperature rise of air}}{\text{Latent heat of steam}}$$

This formula is true for any type of equipment which is used to heat air. When it is apparent what the CFM, which is the amount of air passing over the heating coil ("Cubic Feet per Minute") and the temperature rise of the air are the condensate rate is easily calculated using this formula.

The condensate load can also be determined from the BTU per hour rating of the unit. Divide the BTU/hr heat output by the Latent Heat of steam at the initial steam pressure. For instance, if a unit heater produces 80,000 BTU/hr when it is supplied with 2 psi steam, it will produce condensate at the rate of

$$\frac{80{,}000}{966} = 828 \text{ pounds per hour.}$$

Note that unless the unit is running steadily, it will not actually produce this much condensate in one hour. However, while it is running, it will produce condensate at the rate of 828 lb./hr. and the trap must be sized to handle this rate of condensate flow.

To ensure we understand this aspect, we should perhaps labor for a while longer on this point to make certain that we do. If the above unit heater was in a room that looses heat at the rate of exactly 80,000 BTU/hr, the unit will run continuously and will condense 828 pounds of condensate per hour.

On the other hand, if the heat loss from the room is only 40,000 BTU/hr, the unit will operate only 30 minutes out of each hour, and will condense

$$\frac{828}{2} = 414 \text{ pounds of steam in one hour.}$$

However, and this is important, while the unit is running, it will produce condensate at its maximum rate (i.e. 828 lb/hr.). Therefore, assuming that the steam pressure remains constant, a given unit heater always requires s steam trap for its full rated load, even though it may operate for only a few minutes out of each hour.

The condensate load for radiators and convectors is best estimated with sufficient accuracy if we remember that 4 EDR will condense one pound of steam per hour. If the radiator or convector is running on high-pressure steam, use the conversion factors in Table 1.

Note; install the piping to each unit as well as the unit itself, to maintain a downward pitch toward the steam trap under all conditions.

In general, these connections are swing connections. These joints permit the expansion and contraction that occurs under heating and cooling conditions to take place without bending the pipes or causing undue stresses on the equipment. Also, note that the supply connection from the main to the unit is from the top of the steam main to obtain as dry a steam as possible for the unit.

Hot Water Heating Systems

Hot water heating systems as such are beyond the scope of the present course. However, many such systems make use of hot water, which we produce in a steam-to-water heat exchanger or a semi instantaneous water heater. We will consider the steam trapping and piping hook-ups of these exchangers later in the course when we examine instantaneous and storage water heaters. Another important point to be mentioned in connection with hot water heating systems is that an air vent is required at each high point of the system and each major piece of heating equipment.

Ordinarily only one large float type air vent is installed at a high point on the main system to vent the system air, as well as a manual or small automatic vent on each individual piece of heating equipment.

Steam Absorption Units for Cooling

Those of you who are unfamiliar with refrigeration will be surprised to learn that we can successfully use steam in providing cooling systems as well as heating ones. The thermodynamics and theory of this operation become very involved, but we will try to explain some of the fundamentals. The following paragraphs are really just for the sake of interest - if things are unclear, do not worry about it.

The objective is to circulate chilled water through cooling units in a building for summer air conditioning. This chilled water circuit is entirely separate from the refrigerating unit. To cool this water it passes through a coil in a unit. When we speak of "water" in the discussion below, we will be referring to the water in the refrigerating system itself.

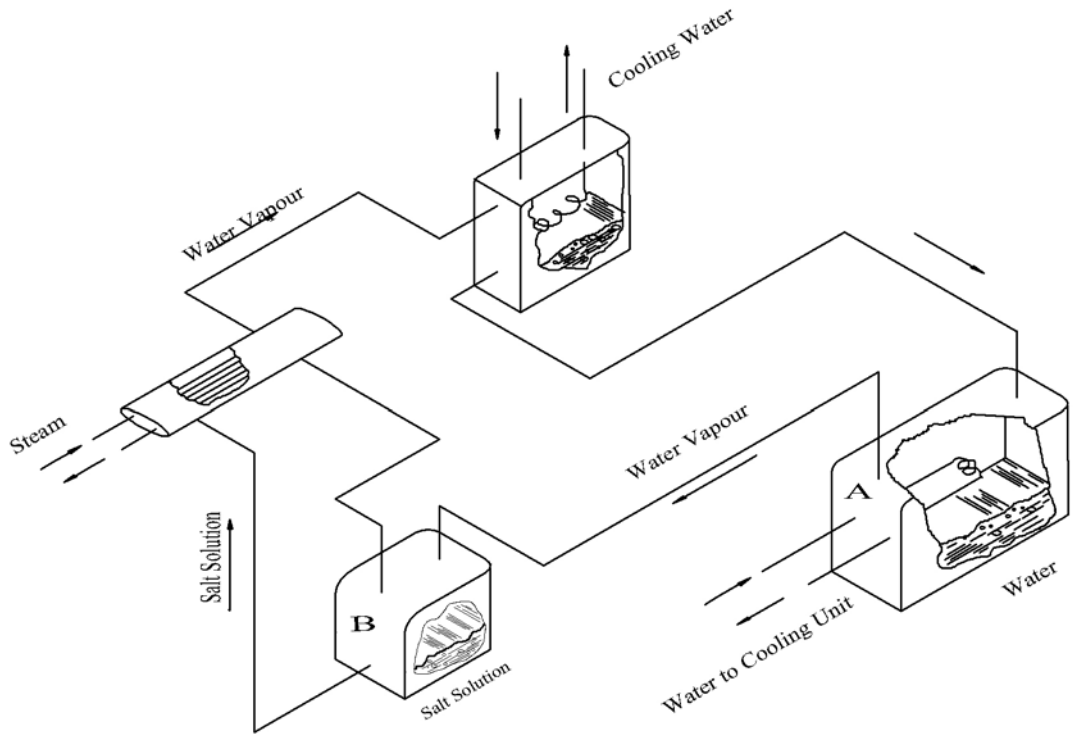

Fig. 13 Simplified Absorption cooling System

The entire system is sealed and is under a very high vacuum; tanks “A” and “B” are at about 0.15 psia. From a complete set of steam tables we find that at this very low pressure, water will boil at about 46 F. We pump the water we want to chill through the coil in tank “A” and then we circulate this water through the building. Since this is circulated water, within the building, it will certainly be warmer than 46 F when it reaches tank “A”. The water temperature in the tank therefore will rise above its boiling point, and will start to boil forming water vapour, which is really low-temperature “steam”. Now, heat is required to boil water even if it is boiling at a very low temperature and pressure. This heat can come only from the water circulating through the coil in tank “A”. The water in the coil will then become cooler after giving up its heat, which is what we were after in the first place; the water temperature could reduce by about 10 F in the coil.

This is all very well, except that the water vapour must be removed from tank “A” otherwise the pressure and hence the boiling point of the water would increase. To accomplish this we incorporate the salt solution in tank “B”. It is a property of some salt solutions that they will absorb water vapour. The salt solution therefore absorbs the water vapour produced as the water in tank “A” boils, and everything is again under control. Is it through? As the salt solution absorbs more and more water vapour, the solution starts to dilute, and as the concentration decreases, it absorbs less water vapour. This is where the steam comes in. Continuously draw the salt solution from tank “B” and pump it through the steam heat exchanger, which will boil off the excess water in the salt solution. The now concentrated salt solution is fed back to tank “B” and the water vapour which has been boiled off is fed to tank “C” where it is condensed and returned to tank “A” to repeat the cycle.

All of these various tanks and heat exchangers are ordinarily contained in one large casing. The advantage of this system is that there are no moving parts, and hence no mechanical wear and no noise or vibration. Considerable quantities of steam are required, but usually excess steam is available in the summertime anyway, and an absorption refrigeration system can help to even out the yearly steam requirements. The system, which has been around for many years, is the oldest known refrigerating cycle but it has been relatively expensive because of the high steam requirements. However, with the advent of central steam systems, especially in major North American cities, and the desirability of maintaining a constant steam demand both summer and winter, absorption systems are becoming more popular.

Each ton of refrigeration will require approximately 20 pounds of steam per hour. A “ton of refrigeration”, by the way, is equal to 12,000 BTU/hr.
This rather odd figure comes from the fact that one ton of ice at 32 F melting in 24 hours will produce a cooling effect of 12,000 BTU/hr., while it converts to a ton of water at 32 F.

The term “tons”, is given for the capacity of refrigerating equipment. Therefore, multiplying the capacity in tons by 20 will give the lb/hr of condensate produced in the heat exchanger. Since these units often have a capacity of several hundred tons, it is usually necessary to use a large double-seated float-thermostatic trap.

Steam for Process Work

We use the term “process steam”, for any purpose other than comfort heating. Whereas very low pressure or even sub-atmospheric steam is ordinarily used in heating systems, process work usually requires steam at considerable pressure; in some cases as high as several hundred psi. Many interesting complications arise in the use of steam in industrial plants. In the next few pages, we will try to solve some of these problems in advance, and we hope we can give a few general rules, which may be useful in specific cases, which we cannot cover here.

What Steam Pressure should we use?

There seems to be a bit of confusion regarding the usefulness of super-heated steam. Steam used for power generation, i.e. in steam engines and turbines, should normally be high in pressure and superheated. Steam used for process work should be as low in pressure as possible and saturated, i.e. as dry as possible without superheat. The reasons we use superheated steam in power generation do not apply to process steam applications.

Superheated steam is a dry gas and behaves like any other dry gas; this is quite different from the way in which a saturated vapour behaves. As it is a dry gas, superheated steam transfers its heat initially only by conduction. That is, it must give up some sensible heat before it can cool to the point where it can give up its latent heat by condensing. Therefore, the heat from superheated steam transfers slower than that from saturated steam.

When the superheated steam next to the heating surface in a piece of equipment has parted with some of its heat, the heat from the remainder of the steam in the space must pass by conduction through the gas, which is a poor conductor, before it can reach the surface and replace the cooler steam.

There is also another considerable difficulty. Part of the superheated steam, which has transformed to saturation temperature begins to condense and gives up its heat in the form of Latent Heat more rapidly than the steam, which is still superheated. This behavior causes irregularities of temperature over the heat transfer surface.

Perhaps an example might make this point clearer:

Let us suppose that we have two identical pieces of steam-heated equipment, “A” and “B”. “A” being supplied with saturated steam at 100 psig, and “B” is supplied with steam at 100 psig superheated by 200 F. “A” is therefore consuming steam at 338 F and “B” at 338 + 200 = 538 F. Both units hold the same volume of steam. Yet at any given time, there is less available heat in “B” than in “A”, even though “B” is at a much higher temperature.

This is rather surprising, so I will explain: Let us assume that each piece of equipment can hold one cubic foot of steam. According to the steam tables, one pound of steam at 100 psi contains 883 BTU of usable heat (i.e. Latent Heat) and occupies 3.9 cubic feet, so that the amount of heat available in “A” is 883 divided by 3.9 = 226 BTU. The cubic foot of steam in “B” has expanded by the 200 degrees of superheat. In one pound of steam at 100 psig and 200 F superheat there are 883 BTU of Latent Heat plus 104 BTU of Sensible Heat in the superheat, giving us a total of 987 BTU. However, since one pound of 200F superheat steam occupies 5.1 cubic feet, we find that the amount of heat available in “B” is only 987 divided by 5.1 = 194 BTU. Thus, although the temperature in “A” is 200 lower than that in “B”, there is available in “A”, 32 more BTU than in “B”.

Now let us consider the speed at which heat transfers from steam. The rate of heat flow depends on, among other things, the difference in temperature between the steam and the heated substance. So in the case of unit “A”, saturated steam condensing on its inner surface gives up its Latent Heat (883 BTU/lb) without any drop in temperature. The temperature remains at 338 F and the amount of heat available in the steam space at any one time is consistent.

In the case of “B”, however, as the temperature of the superheated steam drops from 538 F, it will give up only 104 BTU/lb. (the Sensible Heat). Also, and this is a point often overlooked, the surface temperature will be only 338 F, the same as for saturated steam. This is because the steam next to the heating surface will have lost its superheat and will be condensing at the saturation temperature.

Since 104 BTU’ is an inadequate amount of heat which can transfer from the steam space, the steam must give up its Latent Heat by condensing. Before it can condense, however, temperature must be reduced to the saturation temperature (i.e. 338 F for 100 psig steam). Therefore, we must consider there is a time lag during which the steam loses its Sensible Heat.

We must consider another factor, when superheat is used; the flow of heat into the vessel is greatly retarded. When saturated steam gives up its Latent Heat, it condenses into a small volume, thus making more space for steam to flow forward.

In the case under consideration, it makes room for about 3.9 cu. ft. of steam for every pound that condenses. On the other hand, when the superheated steam gives up its 104 BTU of Sensible Heat, it shrinks only from 5.1 cu. ft./lb. to 3.9 cu. ft./lb. This means that whereas saturated steam allows 3.9 cu. ft. of steam to flow into the vessel for every 883 BTU of heat given up, superheated steam allows only 1.2 cu. ft. of steam to flow in for a mere 104 BTU given up.

There are, of course, certain types of heating for which superheated steam has advantages. These jobs require very little heat. On such applications, the Sensible Heat in the steam in the form of superheat is adequate in maintaining the temperature of the process above the saturation temperature; furthermore, the steam can supply the required amount of heat without condensing. Applications such as this, however, are the exception rather than the rule.

Assuming, then, that we will be using saturated steam, we still must select the best pressure to use. When we know what minimum temperature, a particular job requires and for how long to maintain this temperature, there is no difficulty in calculating the theoretical amount of heat required for that process. There also is no reason why we should exceed this theoretical amount. Therefore, we should use the lowest steam pressure that will permit the required amount of heat to flow in the permissible time through the heating surface available.

Manufacturers usually give the heat output of their equipment at various steam pressures, making it simple to choose the lowest pressure, which will produce the required amount of heat.

It is a good general rule that if we are free to choose the required steam pressure for a given process, the lowest pressure, which will do the job, is the best one to use.
We gain some advantages by introducing a small amount of superheat at the boiler if before the steam is consumed travels through mains for some distance.

As we mentioned earlier, steam entering a piece of equipment should not be superheated but should be as dry as possible. If we can gauge the amount of superheat to be added correctly, the steam will lose this superheat as it passes through the main and as it enters the equipment it will be just on the point of saturation that is, its quality will be 100%. However, this procedure is usually more trouble than it is worth and is not often used.

Uses of Process Steam

Unless the application of steam traps is to be simply guesswork, it is necessary we properly understand the characteristics of the many different types of equipment, which use steam. Many causes of confusion are the lack of standardization in design and in the naming of the various pieces of steam equipment. Even if it were possible, there is no useful purpose served by giving a list of the types of traps and the method of fitting them to every possible piece of process equipment. Therefore, we will try to consider general types of equipment, giving the characteristics of each type, and we will attempt to make the reason for choosing a certain type of trap obvious.

Process steam has many uses. The majority of these uses will fall into one of the categories listed below:

a) To assist the formation of chemical and physical changes. For example, accelerating plating tanks where the process uses hot solutions. Some chemical processes accelerate by heating.

b) Washing. Laundries, textile factories, etc. use large amounts of steam either directly for washing or for heating wash water.

c) Air Heating. We commonly use heated air for drying.

d) Evaporation. This heading includes distillation of chemicals or water, drying by direct heating, etc.

e) Cooking. Including meat cooking, canning, etc..

f) Combinations of evaporation and cooking. Including the manufacture of jam, candy, beer, etc..

g) Heat treatment. In some processes such as vulcanizing, plastic moulding, cloth calendaring, etc., the temperature at which the process operates is more important than the actual quantity of heat that is absorbed.

We will now consider each of these processes in more detail.

Heating to Assist Chemical Action

Almost invariably, this type of heating takes place in a tank, either open or closed. Although this method of heating is not a highly recommended method, it is the simplest way to heat the liquid in the tank, just inject live steam into the tank. In theory at least, this procedure is very attractive.

In practice, however, there is quite an appreciable loss of heat caused by the steam bubbling through the liquid without condensing, especially when the steam pressure is high. This steam, which bubbles through, is, of course wasted. Unfortunately by the steam condensing, the liquid will become diluted which is a serious drawback. Under normal conditions, we return the hot condensate to the boiler room to produce more steam; we also loose the feed water. This increases the amount of boiler feed water, which needs to be treated. If you use the direct steam injection method for various reasons, it is a good practice to use as low a steam pressure as possible and inject the steam through a perforated pipe to make the steam bubbles as small as possible.

A more common method of heating tanks is by means of a steam coil in the tank. Since coil-heated tanks are very common, we will consider the subject in some detail.

The amount of heat released from a steam coil depends largely on the amount of coil area in contact with the steam and the heating time required for heating the liquid in the tank. Therefore, when completely filled with steam the heating-up time will be shortest, and if partially filled with air or condensate the time will lengthen proportionately.

When selecting a steam trap for a coil-heated tank, the length of time that can be devoted to heating up the liquid should be the first consideration given. We are assuming, of course, that the coil is large enough to supply the required amount of heat. Obviously, when discharging condensate near steam temperature to achieve rapid start up, there must be some sacrifice of steam economy.

With other processes, where a rapid heating up period is not necessary, use the Sensible Heat in the condensate to your advantage before removing the condensate from the coil. Therefore, use a float-thermostatic or a thermodynamic steam trap when rapid heating up is a consideration. If rapid heating up is not a consideration, use a balanced pressure thermostatic trap, and for very slow heating up processes, the liquid expansion steam trap is a good choice.

The size of the coil and steam trap depends primarily on the length of time, to heat the liquid in the tank. Once the liquid in the tank reaches the required temperature, little heat is lost from the tank compared to the amount of heat required to warm up the liquid in the first place. This is why the amount of time, for heating up the process, is very important.

Steam Trap Sizing for Coil-Heated Tanks.

We can easily calculate the amount of steam required to heat a quantity of water from the formula:

Pounds of steam required equals

$$\frac{\text{(final temperature - starting temperature) x (weight of water)}}{\text{(Latent Heat of Steam at Pressure being used) x (to be heated)}}$$

If heating liquid other than water, we would multiply the result by the "specific heat" of the liquid.

Example: A steam coil is to heat an open tank holding 1000 US gallons of water from 50 F to 200 F. and is to be heated in one hour. How much steam is required?

$$\text{Pounds of steam} = \frac{(200-50) \times 1000 \times 8.3}{911} = 1367 \text{ pounds}$$

Since the water is be heated in one hour, the average rate of steam consumption will be 1367 lb. /hr. As we shall see below, this is not by any means the <u>maximum</u> rate.

By the way, we use the figure 8.3 in the above example because one US gallon of water weighs 8.3 pounds. One Imperial gallon of water weighs 10 pounds.

Because the steam is probably wet and there will be some heat loss from the tank and liquid surface, the steam consumption would probably be about 15% higher than this figure, giving a total consumption of 1573 lb. of steam in one hour.

We must be careful, however, to distinguish between the condensing rate of steam at any instant and the average rate of condensation over a longer period. When the water is cold, the steam will condense at a greater rate because of the higher temperature difference between the steam and the water. As the water in the tank warms up, the rate of condensation will decrease because there is less temperature differential, and consequently a slower rate of heat transfer.

However, although the rate at any one time may change, the total amount of steam used in the one hour required to heat the water would still be 1537 pounds of steam per hour. When we are sizing a steam trap for the coil, we are, of course, concerned not so much with the total amount of steam condensed in one hour as with the maximum rate of condensation which the steam main control valve and trap will be required to pass.

To easily calculate this maximum rate of condensation, use the complicated entity known as the "Log Mean Temperature Difference" usually referred to as the LMTD. It may be of interest if we spend a bit of time explaining how the LMTD was derived, and how it is used.

As the water in the tank heats up, the temperature rise of the water will probably look something like the graph shown in Fig. 14.

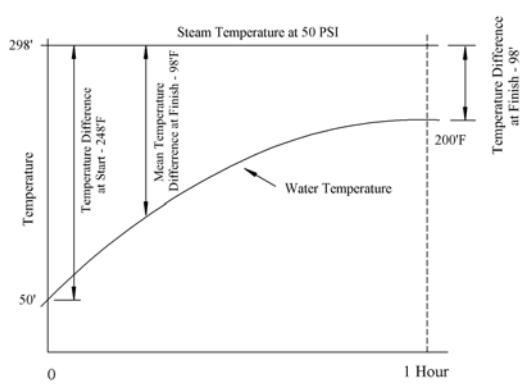

Fig. 14 Log Mean Temperature Difference

At start up, when the water is cold, the temperature difference between the steam and the water will be 248 F. We are still referring to the previous example. After heating the water for one hour, we reach the temperature of 200 F, the temperature difference between the steam and the water will be 98 F. Now, the rate of condensation is proportional to the temperature difference between the steam and the water.

Therefore, at the start of the hour, the condensation rate is 248 divided by 98 = 2.53 times as great as the rate at the end of the hour.

In this example, the LMTD is 163 F (just take this figure on faith for the present – I will explain in the next chapter how it is obtained). This means that if we maintain this temperature differential between the steam and the water for one hour the total steam consumption would be 1,573 pounds, and the water will heat to 200 F. We think of the LMTD as the average temperature difference between the steam and the water during the time that the water is heating up although this is not strictly correct.

We know now that the average temperature difference is 163^0F and we found earlier that the average condensate load is 1573 lb/hr. As we mentioned before, the condensation rate is proportional to the temperature difference. Therefore, the starting load is:

248 divided by 163 = 1.53 times the average load

That is, the start up load (1573 x 1.53) is at the rate of 2400 lb. per hour.

Take into account the start up load when selecting a steam trap.

Chapter 4

Log Mean Temperature Difference

Although this will probably not interest all of you, we will run through briefly the method of calculating the LMTD. If the mathematics gets a bit sticky, do not concern yourself because we will supply a table later, which will do the calculations for you.

In the example, we considered previously, we had a starting temperature difference of 248^0F and a final temperature difference of 98^0F. The arithmetical average of these temperatures is:

$$(248 + 98) \div 2 = 173^0\text{F}$$

However, the arithmetical average is of no use in this case since the rate of temperature rise of the liquid in the tank is not constant but is greater at the start than at the end of the process. If the curve in Fig. 14 were a straight line, the rate of temperature rise would be constant and we could use the arithmetical average in our calculations. Since it is not a straight line, calculate the LMTD, as follows:

$$\text{LMTD} = \frac{\text{starting temperature difference} - \text{final temperature difference}}{2.3 \times \log \dfrac{\text{starting temperature difference}}{\text{final temperature difference}}}$$

Since tables of logarithms are not always available, we have calculated the LMTD for various conditions and tabulated the results in Table 2

COLUMN "A" is: $\dfrac{\text{starting temperature difference}}{\text{final temperature difference}}$

COLUMN "B" is: LMTD for a temperature rise of the liquid in the tank of 100^0F. (we will explain below how to find the LMTD for temperature rises of other than 100^0F)

Table 2 Log Mean Temperature Difference Table For A Δ T of 100°F

A	B	A	B	A	B	A	B	A	B
1.35	334	2.5	110	3.65	78	5.6	58	7.9	48
1.4	298	2.55	106	3.7	76	5.7	58	8.0	48
1.45	268	2.6	104	3.75	76	5.8	56	8.2	48
1.5	246	2.65	102	3.8	74	5.9	56	8.4	46
1.55	228	2.7	100	3.85	74	6.0	56	8.6	46
1.6	212	2.75	98	3.9	74	6.1	56	8.8	46
1.65	200	2.8	98	3.95	72	6.2	54	9.0	46
1.7	188	2.85	96	4.0	72	6.3	54	9.2	46
1.75	178	2.9	94	4.1	70	6.4	54	9.4	44
1.8	170	2.95	92	4.2	70	6.5	54	9.6	44
1.85	162	3.0	90	4.3	68	6.6	52	9.8	44
1.9	156	3.05	90	4.4	68	6.7	52	10.0	44
1.95	150	3.1	88	4.5	66	6.8	52	10.2	44
2.00	144	3.15	88	4.6	66	6.9	52	10.4	42
2.05	140	3.2	86	4.7	64	7.0	52	10.6	42
2.1	134	3.25	84	4.8	64	7.1	52	10.8	42
2.15	130	3.3	84	4.9	62	7.2	50	11.0	42
2.2	126	3.35	82	5.0	62	7.3	50	11.2	42
2.25	124	3.4	82	5.1	62	7.4	50	11.4	42
2.3	120	3.45	80	5.2	60	7.5	50	11.6	40
2.35	118	3.5	80	5.3	60	7.6	50	11.8	40
2.4	114	3.55	78	5.4	60	7.7	48	12.0	40
2.45	112	3.6	78	5.5	58	7.8	48		

To use this table:

1. Find steam temperature at working pressure (from steam tables)
2. Subtract starting liquid temperature from 1.
3. Subtract final liquid temperature from 1.
4. Divide answer #2 by answer #3
5. Using this number, find the LMTD from the table above. The values of the LMTD given in this table are all for a 100* F liquid temperature rise. For any other temperature rise, multiply by the required temperature rise divided by 100
   Example: Actual LMTD = LMTD from table x $\frac{\text{new temperature rise}}{100}$

Installation of Heating Coils

Install tank heating coils so that there is a slight fall toward the outlet. If the pipe size of the coil is larger than the pipe size of the steam trap, use an eccentric reducer at the coil outlet so that the condensate can drain from the coil flush with the bottom. Remember steam traps are sized on the condensation rate and pressure differential and not on the pipe size of coil. If the drainage point is from the bottom of the tank, a float-thermostatic trap should be fitted as close as possible to the outlet. See fig. 15. If for some reason you pick a thermostatic trap, install an approximate 3' long collection LEL, sized to match the trap inlet.

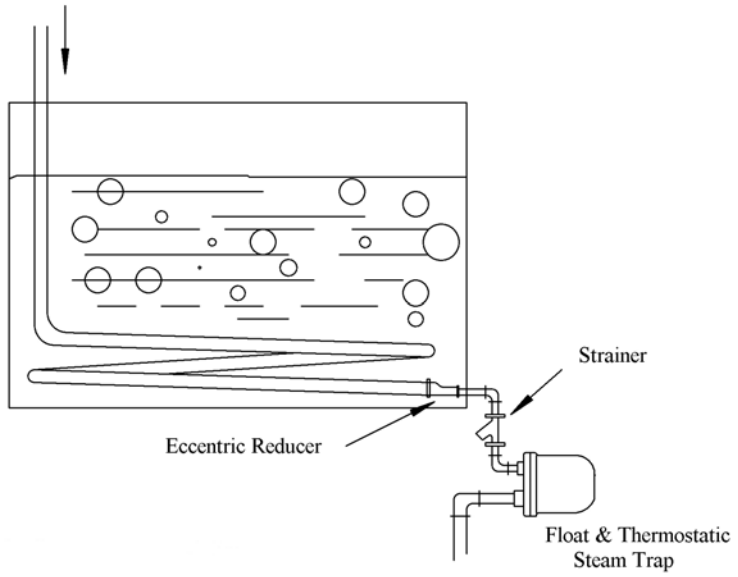

Fig. 15 Coil Outlet Through Side

In many cases, particularly in plating tanks where the tank lining does not permit piercing by a pipe, the coil outlet travels up and over the side of the tank. In this case, because it is more susceptible to steam locking, do not use a mechanical steam trap i.e. a bucket or float-thermostatic trap. A balanced pressure or liquid expansion thermostatic trap is more suitable.

The pipe coil must have a fall or pitch toward the outlet end, and at the outlet there should be a collecting point for condensate - a full-sized elbow with the outlet turned downward or preferably a lift fitting.

It is most important that the collecting point should be at the lowest point in the piping and that it should form a seal for the condensate. A lift fitting will provide for a seal and for a reduction in diameter of the rising leg to the trap, (this reduction in diameter of the rising leg is most important, and will be explained later). Install a strainer and steam trap at the top of the lift just below the highest point of the rising pipe see Fig. 16.

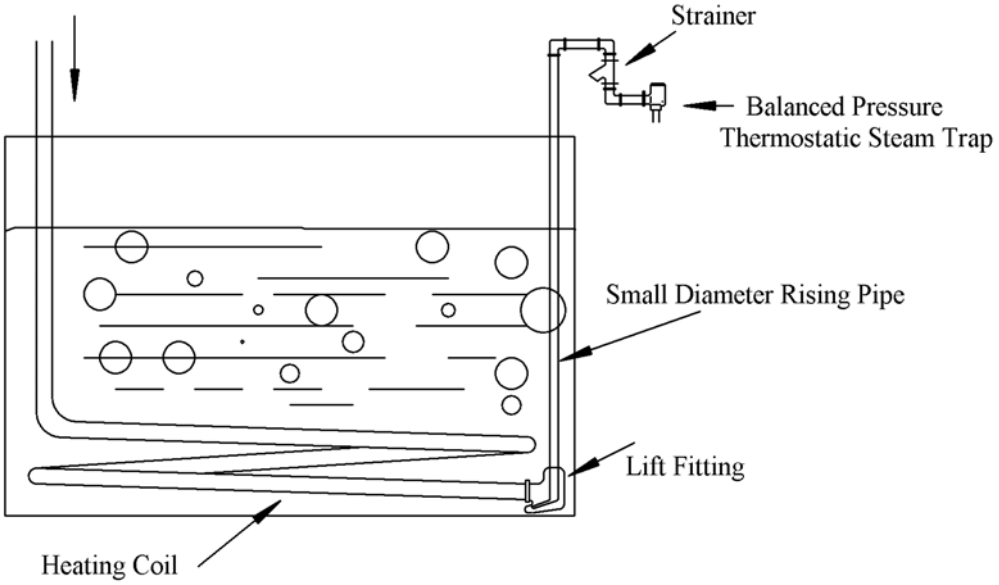

Fig. 16 Plating Tank

It is a common mistake to continue the coil piping full size to the top of the tank, reducing it at this point to a smaller diameter. To consider what happens in this sort of hook-up, refer to Figure 17.

When introducing steam to the coil, a quantity of condensate will be lying in the bottom pipe. The introduced steam pressure pushes this condensate to the steam trap for removal from the system. The trap closes when the rising pipe "A" is full of steam. More condensate begins to collect in the bottom of the coil but steam can pass over the top of it to keep the pipe "A" and the trap full of steam.

Until the end of pipe "B" is completely full of condensate, there is no reason why the condensate should travel up pipe "A". When the bottom of pipe "A" becomes "sealed" with condensate, the condensate will slowly begin to rise in pipe "A" to take its place. The larger the diameter of Riser "A", the greater volume of locked steam will dissipate.

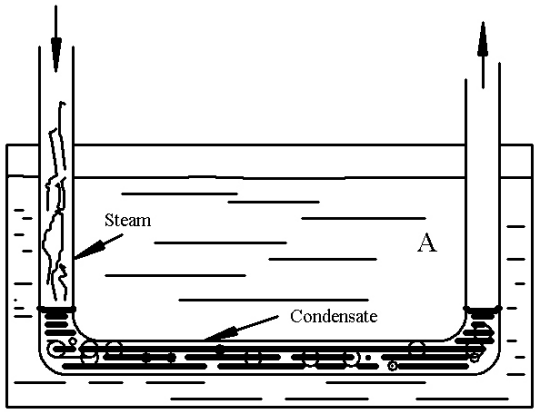

"A"

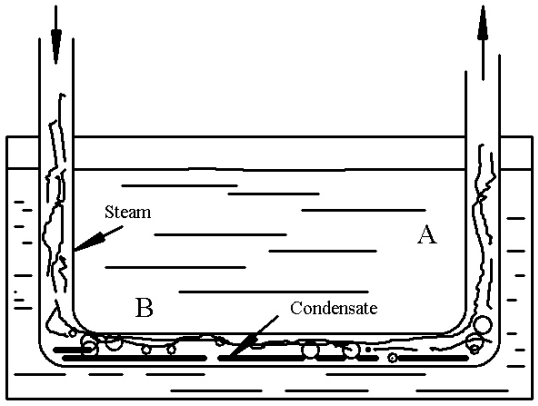

"B"

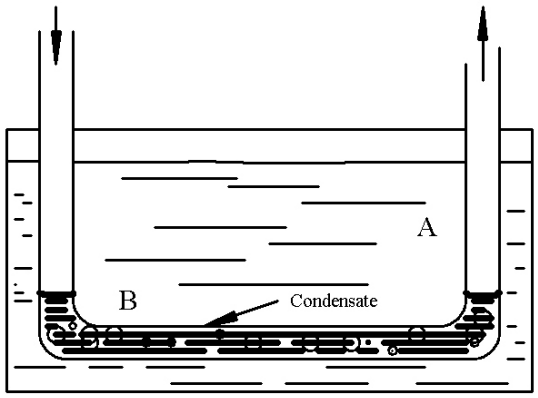

"C"

Fig.17 Improper Coil Installation

However, as soon as any appreciable amount of condensate has risen up pipe “A”, steam will bubble through to replace that which condensed. Therefore, until pipe “B” is heavily waterlogged condensate is unable to travel up pipe “A” to open the trap.

This water logging causes poor heating and can result in severe water hammer. To prevent this problem use the arrangement shown in Fig. 16. When the trap closes after releasing the initial condensate, steam fills the lift fitting and rising pipe. As soon as condensate forms, it runs into the lift fitting and seals the bottom of the riser.

The steam in the riser condenses; the steam pressure forces the condensate in the seal up the riser to the steam trap. The seal formed by the lift fitting and the small diameter riser both help to prevent live steam from bubbling through to the trap, thus condensate reaches the steam trap in an unbroken column. If undesirable, this time cycle caused by the steam lock can be sped up by installing and adjustable globe or needle valve on a by-pass around the steam trap.

Heating to assist chemical actions may also be accomplished using steam-jacketed vessels but these are similar to the vessels used in cooking, and will be described later.

Designing Pipe Coils

Some of you may at times be required to design pipe coils for heating liquids in tanks. Exact calculations can become very complicated, but we can give you a simplified procedure that will be accurate enough for most ordinary applications.

The first step is to determine how much heat is required. In most instances, the amount of heat required to warm the liquid in the tank to its final temperature will be more than sufficient to take care of the heat losses from the tank after it reaches its desired temperature.

The amount of heat required to raise the temperature of a liquid is calculated by the formula:

$$H = \frac{\Delta T \times SH \times W}{Time}$$

Where: H = Heat required - BTU/hr.
ΔT = Temperature rise (i.e. final temperature - starting temp) - ^0F
SH = Specific heat of liquid (= 1.0 for water)
W = Weight in pounds of liquid in tank
Time = Length of time in hours allowed for heating the liquid

For example: A tank containing 1000 imp. Gals. (10,000 lb.) of water needs to be heated from 40^0F to 140^0F in 30 minutes.

Heat required = $\frac{(140-40) \times 1.0 \times 10{,}000}{}$ = 2,000,000 BTU/hr.

½

The heat lost through the walls of the tank and through the surface of the liquid would probably be about 250,000 BTU/hr. when the water has reached 140^0F.

Therefore, a coil, which is large enough to heat the water in the required length of time will also be able to maintain the water at the final temperature.

This is almost invariably the case; under normal conditions, size the coil with regards only to the warm-up requirements. If conditions are not normal, it is best to seek outside help.

These abnormal conditions might include:

- Un-insulated tanks installed outside
- Cases in which the warm-up period is several hours
- Cases in which large amounts of cold material are added to the hot liquid (as in some plating tanks, for instance)
- Shallow tanks which expose a relatively large area of liquid to the atmosphere.
- In short, examine any situation in which heat loss from the tank itself is likely to be abnormally high more closely.

Having determined the BTU/hr. required, the next step is to design a coil to supply this amount of heat.

There is no simple calculation of the amount of heat transmitted from an immersed steam pipe in water by using only temperature differences. The rate of transmission depends upon many of the following factors.

(a) The actual mean temperature and pressure of the steam in the coil

(b) The length of each coil or loop

(c) The diameter of the pipe

(d) The movement of the fluid over the pipe

(e) Whether the pipe coil is vertical or horizontal

(f) Both starting and final fluid temperatures

(g) The overall diameter of the battery or bank of coil tubes
(h) The speed with which the fluid flows over the surface of all the tubes

It also depends upon the type and schedule (wall thickness) of pipe used and maintaining a clean surface under operating conditions. However, in many cases use the heat transmission factors without introducing safety factors, which allow for many of the issued variable conditions.

Table 3 Heat Transfer Rate

B T U Given off per hour per Ft. Run of wrought-iron pipe with starting temperature of 40'F and final temperatures of 140'F
To calculate the emission when using copper pipe, use table 5 & 6

Steam Pressure gauge	3/4"	1"	1-1/4"	1-1/2"	2"	2-1/2"	3"
1	4,050	5,950	7,150	8,160	10,500	12,700	15,000
2	4,300	6,300	7,500	8,600	11,100	13,400	15,700
5	5,000	7,300	8,800	10,000	13,000	15,600	18,400
10	6,000	8,800	10,600	12,100	15,600	18,800	22,000
20	7,800	11,000	13,200	15,100	19,500	23,500	28,000
30	8,900	13,100	15,700	18,000	23,200	27,800	33,000
40	10,200	14,800	17,800	20,400	26,400	31,700	37,500
50	10,800	15,800	19,000	21,800	28,000	33,700	39,800
75	13,100	19,200	23,100	26,500	34,200	41,000	48,200
100	14,600	21,400	25,700	29,400	38,000	45,600	53,600

The above figures are based on clean wrought-iron tubes and maintaining a steam pressure for the entire length of the coil. To calculate the output, an adequate margin should be allowed for "a" encrustation of pipe surfaces and "b" the possible drop in steam pressure, which varies according to the length of coil. Use the average steam pressure in the coil for calculations on coil capacity, and not the initial or main line pressure.

"a" For encrustation, the use of any factor is problematic but a factor form 75% down to 50% efficiency may be used, according to the conditions expected.

"b" The drop in steam pressure will depend on the length of coil and the capacity of the steam control valve, but an average steam pressure in the coil taken at 50% of the initial steam pressure will do for calculating heating value, in most instances.

N.B. Table No.3 is based on, a final temperature of 140° F, for other final temperatures multiply Table 3 by the factors in Table 4.

Table 4 Final Temperature Factors

Final Temperature	100°F	120°F	140°F	160°F	180°F	200°F	212°F
Multiplying Factor	1.30	1.14	1	.88	.76	64	.54

For pipe material other than wrought iron, multiply the figures in Table 3 by a factor taken from Table 5.

Table 5 Factors

Wrought – Iron	----------	1
Brass	----------	1.35
Copper	----------	1.45
Cast Iron	----------	.81

Table 6 Cu Factors

Actual Outside Surface of Wrought Iron and Copper Pipes

When using standard type K copper pipe, multiply figures in Table 3 by factor in Column "B" and Divide by Factor in Column "A"

Size	"A" Iron	"B" Copper
1/2"	0.22	0.164
3/4"	0.275	0.229
1"	0.344	0.295
1-1/4"	0.435	0.360
1-1/2"	0.498	0.426
2"	0.622	0.556
2-1/2"	0.753	0.687
3"	0.917	0.818

Example: Calculate the amount of 2" copper pipe necessary to heat 2500 U.S. Gal. Of water from 40° F to 160° F in one hour using 50 psig steam.

Heat Required

$$\frac{\text{2500 gal. X 8.3 lb./gal. X 120° F temp. rise}}{\text{1 hour}} = \text{2,490,000 BTU/hr.}$$

From Table 3: Assume that the average steam pressure in the coil will be 80% of 50 psi. or 40 psi. 2" wrought-iron pipe filled with 40 psi steam will provide 26,400 BTU/hr. per foot run of pipe.

From Table 4: Since we have a final temperature of 160° F, we must multiply by a factor of .88

2" wrought iron pipe will then give off .88 x 26,400 = 23,232 BTU/hr. per foot of run.

From Table 5: A copper pipe gives off 1.45 times as much heat as a wrought-iron pipe. Therefore, we have 23,232 x 1.45 = 33,686 BTU/hr. per foot run of 2" copper pipe.

From Table 6: We find that we must apply yet another correction factor to allow for the fact that 2" copper pipe has less outside surface area than 2" wrought-iron pipe:

$$33{,}686 \times \frac{.556}{.662} = 30{,}100 \text{ BTU/hr. per foot run.}$$

Now, since we require an output of 2,490,000 BTU/hr., we should use:

$$\frac{2{,}490{,}000}{30{,}100} = 82.7 \text{ ft. of 2" copper pipe}$$

We should allow a factor of approximately 50% to allow for encrustation, giving us a requirement of:

82.7 + 50% = 124 ft. of 2" copper pipe.

Steam for Water Heating. Washing, Laundries, Textile Mills, etc.

The heating of water with steam usually involves the use of a steam-to-water heat exchanger. Since this equipment is so frequently encountered we will consider it in some detail.
By the way, we are speaking here of processes in which the desired end product is simply a supply of hot water - not processes such as we considered in the previous section in which a tank of water or other liquid must be heated and maintained at a specific temperature.

In this course, we will only consider industrial and large commercial applications. There is a bewildering variety of domestic water heaters available with different principles of operation.

Virtually all industrial steam water heaters however are similar in design. Steam water heaters belong in one of the two general groups: instantaneous heaters or “converters”, and storage water heaters.

Instantaneous Water Heaters

Instantaneous heaters continuously heat cooler water as it flows through the heater. Steam starts to flow through the regulator or ceases as the flow of water passes over the thermo sensing device sensing the temperature differences of the water. There is no storage of hot water. The heater usually takes the form of tubes contained in a shell therefore the term “shell and tube” exchanger as shown in Fig 18.

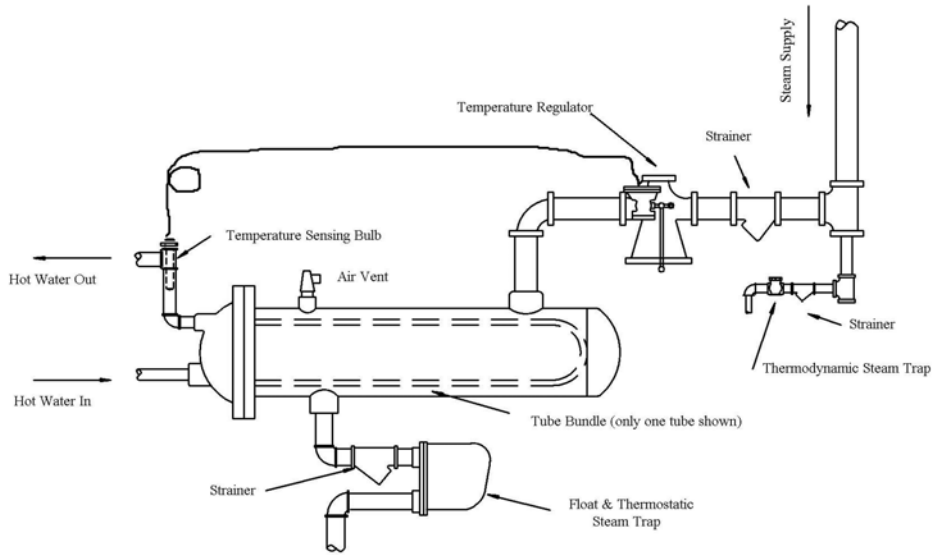

Fig. 18 Instantaneous Water Heater

Steam flows into the shell, surrounding the tubes through which the water flows. Control is by means of temperature regulating valve on the steam supply line, which operates by a sensing bulb installed in the water line. When water starts to flow, the bulb senses the temperature differences and opens or closes the steam valve.

Use this type of water heater when:

1. The demand for hot water is very infrequent, and it would be expensive to maintain a storage tank full of hot water.
2. It is necessary to have a constant demand for hot water; size the exchanger appropriately to supply the necessary amount of hot water.

One disadvantage to this type of heater is the difficulty in obtaining accurate temperature control when there is infrequent usage of hot water in the system. The design of heat exchangers is to have a relatively large amount of steam surround a small amount of water in the tubes to have a high "steam-water ratio". This means that when heat is no longer required and the valve closes, there is still steam remaining in the exchanger and the water temperature on rise above the desired control temperature set point. This temperature over-ride may or may not be objectionable.

In some cases, it can be so severe that the regulator's sensing bulb can be severely strained, causing failure of the regulating valve. There is also the ever-present danger of passing a slug of overheated water to a shower or bath with disastrous results. Therefore, it is very important not to oversize the regulator and the heat exchanger.

Carefully size the regulating valve to meet the maximum hot water demand. This maximum demand is not, necessarily the same as the maximum output of the heat exchanger. Possibly the heat exchanger was originally oversized, or the hot water requirements changed since the installation.

If gross over sizing of the exchanger has occurred resulting in considerable temperature overshoot, it sometimes may be helpful to reverse the piping connections so that the steam is in the tubes and the water passes through the shell. This will decrease the steam-water ratio of the heater, and will reduce the output considerably.

If you are using a heat exchanger to meet a constant demand for hot water, use a modulating temperature regulator. That is, a regulator, which can assume intermediate positions between fully open and fully closed, depending on the temperature variations and amount of water flowing through the exchanger. Unless there is a continuous demand for hot water, the valve must be capable of shutting tightly during periods when heat is not required. For example, if you used a double-seated regulating valve under these conditions, there could be enough leakage through the valve in no-load periods to boil the water in the exchanger.

If the heat exchanger was operating infrequently, use an on-off type of steam regulator, so that the steam valve will close completely during periods of no load and will open fully when hot water is required.

It may be convenient to know that on the average one square foot of heating surface in the tube bundle will heat approximately 20 USGPH of water from 40° F to 180° F using steam at 0 psig. Most manufacturers list in their catalogues the number of square feet of heating surface in their tube bundles.

Cascade

Although control valves do have a place in process, the most economical and best-kept secret in the industry today is using a pneumatic pilot operated regulator with an air controller which gives you excellent control at a tremendous saving. This regulator will replace the expensive control valve and still maintain the high level of control which is required in processes without the need of installing a separate pressure reducing valve to maintain the constant pressure that the control valve needs for its fine control.

SPENCE offers a pneumatically loaded, steam-piloted regulator that can cut valve costs by 65% and yet offer better process control than the conventional system. In fact, to achieve this improved control, it is often advantageous to incorporate this regulator into an existing system.

Let's assume we are using a high-pressure steam distribution main and local steam pressure reducing stations. If you normally employ a central pressure reducing station and transport the steam at a lower pressure to the process areas, then your savings may be even greater than what we show here.

In a conventional system, at the point of use, steam enters the process equipment through automatic control valves. These valves are positioned by the various process control instruments that measure temperature, pressure, flow rate or other variables. The process units are thereby maintained at the desired level.

The concept is shown in fig.19. This valve is cascaded with a master controller. The regulator can make immediate changes in the rate of steam flow when the pressure varies, and follow up with finer adjustments based on changes in the process characteristics.

Since this device is actually a high speed, cascaded pressure-control loop, expect improved process control. The 3 to 15 psi pneumatic signal from the primary control instrument is translated directly into pounds per square inch of steam pressure so that the varying requirements of the process can be met quickly and accurately. Any variation in the steam pressure is compensated automatically.

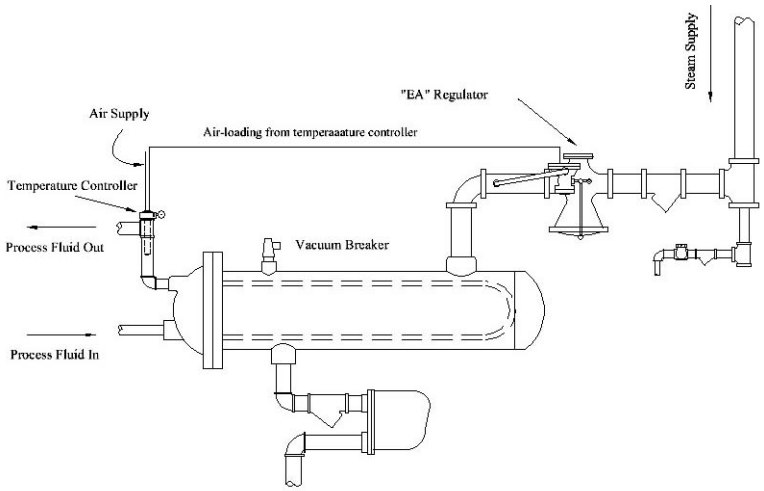

Fig. 19 How the system works

Let's assume the load on the heat exchanger increases, causing a drop in steam pressure. The lower pressure in the control line allows the diaphragm in the pilot to be deflected downward. This triggers a reset of the main valve, which is positioned by high-pressure steam; increasing the steam flow until the pressure in the control line again equals the preset opposing pressure in the pilot. A final adjustment is made if the thermostat in the heated process-fluid feeds a new temperature signal into the recorder-controller, causing it to change the air loading on the pilot.

Several money-saving features of this concept should come to mind immediately:

1. The pressure reducing station can be eliminated because the same valve can serve both to reduce the pressure and to modulate it for process control purposes.

2. More pressure drop will now be available at the control valve, which means that the valve can be smaller.

3. If a central pressure reducing station is normally used, then this system allows you to supply steam at high pressure, using smaller diameter piping. Savings here would be considerable

STUDY SHOWS 65% SAVINGS ON CONTROL VALVE COSTS

For ease, we have prepared this cost study on a hypothetical plant with only four users. Fig. 20 shows the piping detail of a conventional system and that of the regulator concept. Table 7 “Size Comparison” gives flow rates and sizes of valves.

We assume that all process units require low-pressure 15-psi steam. If other pressures were required to perform the job function, this is attained by simply selecting a different pilot.

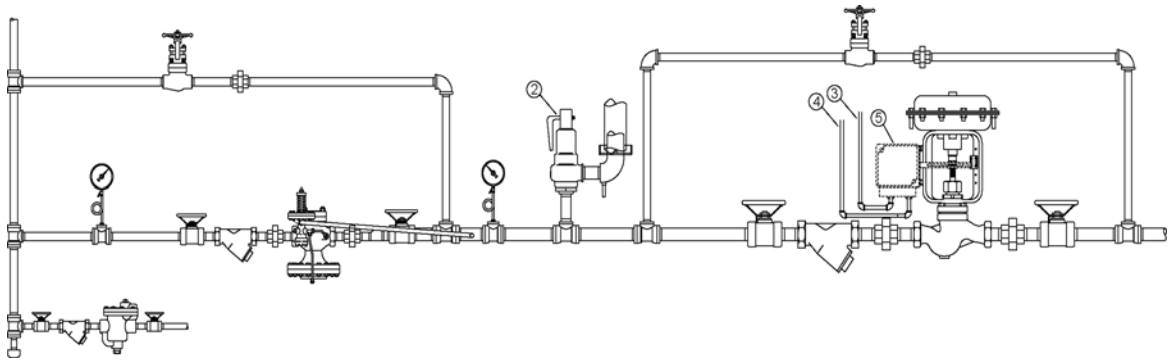

Fig. 20 Details of piping of typical diaphragm control valve, a conventional system.

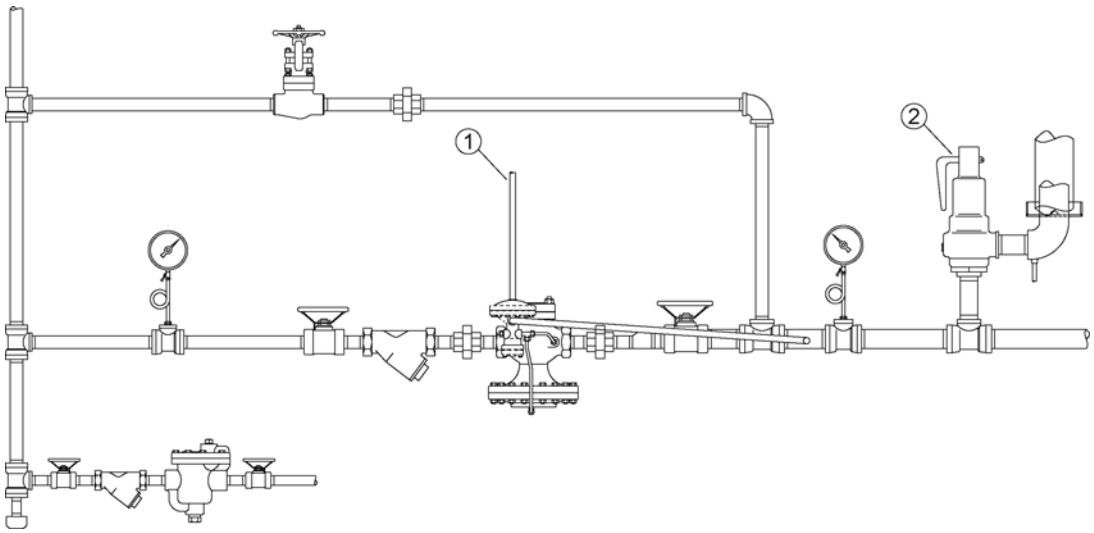

Fig. 21 Details of piping of air-controlled, steam-piloted regulator (new cascade system).

1- Air-loading from temperature controller

2- Safety valve

3- Air Supply

4- Air signal from temperature controller

5- Valve positioner

PERFORMANCE COMPARISION

While the conventional control valve package usually needs little maintenance, the air-controlled regulator needs even less. The regulator is of packless construction, eliminating all of the problems associated with stuffing boxes friction, leakage, adjustments, and exposed stems. Since no positioner is required, and since all the moving parts are unexposed, maintenance is minimized.

The steam-piloted regulator has several design features that contribute to fast response. No stuffing box means that friction is negligible. The power available is large and the control and signal lines are short. Random load fluctuations are rapidly corrected. The result is a true cascade control system, offering finer control at less expense

Instrumentation and other items that are common to both systems are not included. Only costs of the valves are considered.

Table 7 Size Comparison

	User 1	User 2	User 3	User 4
Steam Flow rate lbs/hr	3000	2000	5500	3500
Case 1 Conventional system				
Pressure reducing valve	1-1/4”	1”	2”	1-1/2”
Control valve	3	2-1/2”	4”	3”
Globe valve	1-1/4”,3”	1”,2-1/2”	2”,4”	1-1/2”,3”
Isolation valve	1-1/4”,3”	1”,2-1/2”	2”,4”	1-1/2”,3”
Strainer size	1-1/4”,3”	1”,2-1/2”	2”,4”	1-1/2”,3”
Case 2 Regulator system				
Regulator (replacing control valve)	1-1/4”	1”	2”	1-1/2”
Globe valve	1-1/4”	1”	2”	1-1/2”
Isolation valve	1-1/4”	1”	2”	1-1/2”
Strainer size	1-1/4”	1”	2”	1-1/2”

Scenario 1 represents the conventional system where 150 psi steam is supplied to each local pressure reducing station. As a convenient rule of thumb, the pressure drop allowed for the sizing of each control valve is 3 psi.
Scenario 2 represents the pneumatically loaded steam piloted regulator

Cost Comparisons

	Scenario 1 Conventional	Scenario 2 Regulator
Pressure reducing valve	$2,232.00	$ ---
Control valve –positioner not included	$3,792.00	$2,720.00
Globe valves	$682.00	$57.00
Isolation valves	$1,203.00	$95.00
Strainers	$382.00	$54.00
Total cost	$8,291.00	$2,926.00

Note: care has been taken to keep these figures as conservative as possible. Under normal circumstances, the savings would be greater.
Not considered in this cost analysis is the labour and piping saved by not installing the extra station. In this instance that would have amounted to at least $1,100.00

EXISTING INSTALLATIONS

The foregoing text has probably suggested applications in which many of the favorable features of the regulator concept can be exploited even though a system is already in use. The following examples further demonstrate such applications.

1. If fluctuation of your supply pressure causes unacceptable quality of control, replacement of a conventional control valve with an air-loaded regulator will remove these disturbances. The cost will be less than an independent steam pressure regulator installed ahead of the control valve. We should always be suspicious of an installation featuring two or more valves in series. There are few cases where multiple duties cannot be performed by a single valve. Changing load conditions can also be remedied by utilizing the cascade control.

2. There are times when a valve positioner must be added to a control valve. If the valve is relatively small, it may be more economical to replace it with a pilot operated regulator.

3. If the duty on a process unit using low pressure steam has to be increased possibly larger equipment by operating at higher steam pressures. This may be accomplished by introducing higher-pressure steam through an air-loaded regulator;

4. Sometimes, due to expanded plant capacity or sudden load surges, the steam plant cannot always keep up with the demand and consequently, steam pressure drops. (Sometimes even causing boiler syphonage.) By adding a back-pressure pilot to the air loaded SPENCE regulator on non critical processes, they can be made to cut back, and if supply pressure continues to fall, even shut off completely.

LIMITATIONS?

The regulator concept is suitable to most process applications, but not all. The following is a review of its limitations:

1. There are times that cascade control is undesirable. Some processes require an independently regulated steam flow, regardless of load changes or other disturbances.

2. At the present time valves are limited to supply pressure of 600 psi and 500°F.

3. Turn down is limited to about 10:1 unless you make use of pressure balanced trim and parabolic discs.

Storage Water Heaters

Storage water heaters_consist of a large vertical or horizontal tank with a steam coil called a “tube bundle” installed somewhere near the bottom of the tank. Use this type of heater when the demand for hot water fluctuates and long periods of low or no demand occurs. The heating element will then have time to heat the water in the tank ready for the next time hot water is required.

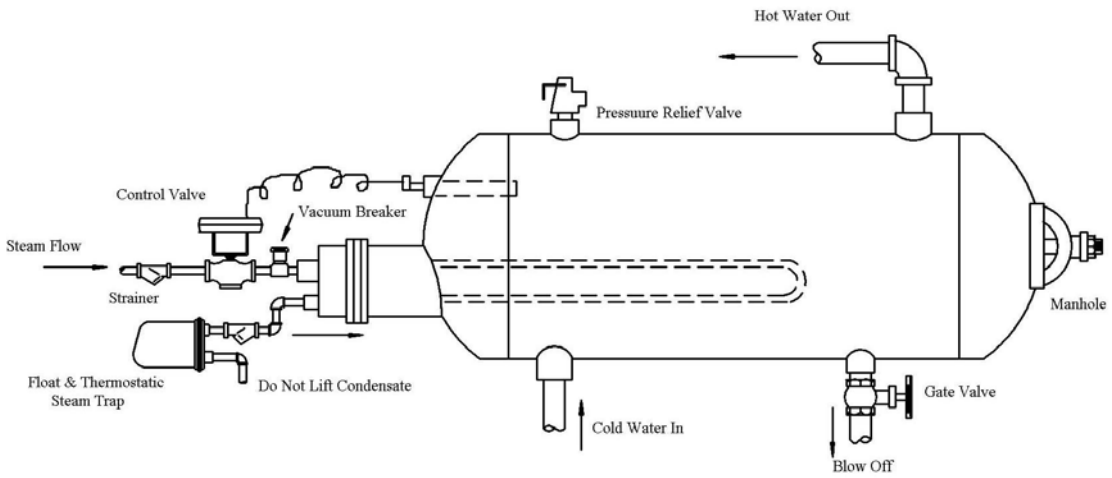

Fig. 22 Storage Water Heater

As with the instantaneous heaters, a temperature-regulating valve with its thermostat installed in the tank controls the steam supply so that the temperature of the water held in storage is constant. Temperature over-ride is not an issue, as long as the temperature regulator is working properly, because of such a large volume of water surrounding a comparatively small amount of steam. This is a very low steam-water ratio system.

Storage water heaters usually rest for long periods without any demand for hot water. A well insulated storage tank gives up very little heat during rest periods, thus little heat is required to maintain the tank temperature. For this reason, the control valve on the steam supply should be a modulating type, which can open partially to admit a small amount of steam to account for the standing heat losses from the tank.
This valve should be capable of shutting off tightly when steam is not required although this tight shut-off is not as important as it is with the instantaneous heater.

There is also a steam water heater, which is a cross between an instantaneous converter and a storage heater as shown in Fig. 23. One disadvantage of an instantaneous exchanger is that there is always a certain amount of cold water drawn from the heater before the control valve is able to open and admit steam to the tubes. There is also, as we mentioned earlier, the problem of temperature overshoot when there is retarded water flow.

Semi Instantaneous Water Heater

To eliminate these problems we continuously circulate water from the small storage tank over the tube bundles. As this water circulates, it passes over the sensing bulb of the temperature regulator, which can then open to admit enough steam to maintain the desired water temperature. When drawing hot water from the tank, some of the incoming cold water passes through a small sampling line directly to the sensing bulb of the regulator, enabling the valve to anticipate the incoming flow of cold water and admit steam in time to heat this water before it can cool the water in the tank. Using this system, which by the way, comes as a packaged unit, it is possible to keep the temperature of the outlet hot water constant to within about 5 degrees, even when the hot water draw changes suddenly.

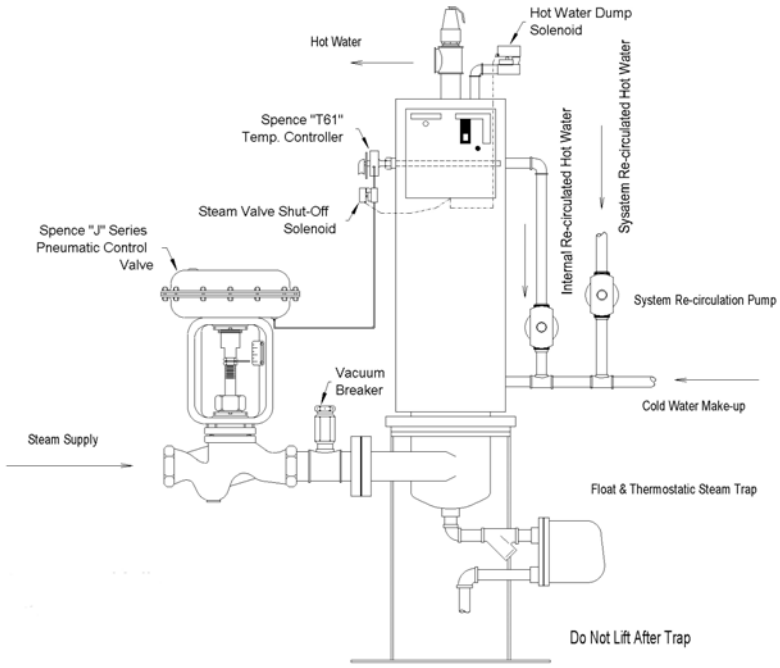

Fig. 23 Patterson Kelly Compact Water Heater

Trapping Methods

The correct selection and installation of steam traps for both instantaneous and storage water heaters are extremely important. Probably no other type of heating equipment can give rise to so many problems.

A temperature-regulating valve controls the temperature in the steam space by regulating the steam pressure. The temperature at the condensing surface is the saturation temperature corresponding to whatever steam pressure currently exists in the steam space.

In heat exchangers, when a large quantity of hot water is required the regulating valve will be open wide and the pressure in the steam space will be high. As the hot water demand decreases, the valve gradually closes, throttling the steam and decreasing the pressure in the steam space. Thus, both the condensate load and the steam pressure vary considerably during the operation of the heater.

If the condensate load and the steam pressure varied uniformly over the entire range of operation, there would always be enough pressure available to force the required amount of condensate through the trap, and trapping would present no problem. This is not the case however; the variation in pressure is much greater than the variation in load.

For example:

We have an instantaneous heater which is designed to heat 1000 U.S. gallons of water per hour from 50°F. to 200°F. using steam at 50 psig. A temperature-regulating valve controls the steam supply; reducing the pressure in the steam space as the demand decreases to maintain the same final temperature of 200° F no matter how much water is passed through the heater.

What is the rate of condensation?

1. Under full load when 1000 USGPH is passing through the heater and the valve is wide open so that there is almost 50 psi in the steam space.

2. When the steam pressure reduces to 5 psi, while maintaining the outlet water temperature at 200° F when a desired amount of water passing through the exchanger while

1. Steam load $= \dfrac{\text{temperature rise x USGPH x 8.3}}{\text{latent heat at 50 psig}}$

$$= \frac{(200^\circ \text{ F} - 50 \text{ F}) \times 1000 \times 8.3}{911}$$

= 1367 pounds of steam per hour

Allowing 10% for steam wetness and losses, the load will be 1,504 lb/hr.

2. We must now find the steam load when the steam pressure is 5 psi. Since condensation rate and therefore steam load is proportional to temperature difference, we will find the LMTD for 50 psi and for 5 psi. The water temperature rise (50 to 200° F) will be the same in each case.

To use the Log Mean Temperature Difference Table 2 We must first find the ratio of outlet temperature difference to inlet temperature difference.

50 psi steam has a temperature of 298° F ratio $= \dfrac{298 - 50}{298 - 200} = 2.53$

From Table 2 TD for this ratio and a 100° F, temperature rise is 109° F.

Since we have a 150° F. temperature rise, the LMTD is:

$$\frac{150}{100} \times 109 = 163^\circ \text{ F.}$$

For 5 psi steam at 228° F : ratio $= \dfrac{228 - 50}{228 - 200} = 6.35$

$$\text{LMTD} = \frac{150}{100} \times 54^\circ \text{ F} = 81^\circ \text{ F.}$$

Now, we know that the steam load when the LMTD is 163° F. is 1504 lb/hr.

Therefore, when the LMTD is 81° F. the steam load is:

$$1504 \times \frac{81}{163} = 754 \text{ lb/hr.}$$

Thus, we have found that when the pressure in the steam space is 50 psi, the condensate load is 1504 lb/hr; when the pressure is 5 psi, the condensate load is 754 lb/hr. It is interesting to note that although we have reduced the steam pressure by a factor of ten, the condensate load is only cut in half.

However, the capacity of a steam trap at 50 psi is about three times its capacity at 5 psi, so that while we have cut the condensate load in half, we have reduced the discharge capacity of the steam trap by a factor of three.

Therefore, a trap which is carefully sized to handle the maximum load conditions at full steam pressure will almost certainly be too small when the hot water requirements (and hence the steam pressure) have dropped.
The trap must, or course, be selected to handle the maximum load at the maximum steam pressure, but it must also be capable of handling whatever load occurs at the minimum pressure.

At least in theory, this minimum pressure can be considerably below atmospheric pressure for much of the time. In fact, when the steam pressure drops and condensate forms quicker than been discharged through the trap, the steam coil will start to waterlog, reducing the heat transfer surface. The regulator will then open to admit additional steam, and eventually reach an equilibrium point where the steam pressure is sufficient to give the required heat input through the reduced heating surface and, at the same time, discharge condensate through the trap.

Nevertheless, under no load or very low load conditions, the steam space can be under vacuum and there will be no pressure available to force the condensate through the trap. Install a check valve on the trap outlet; this will stop any condensate from flowing backwards through the trap, increasing the flooding of the coil.

Water logging or flooding of steam coils almost invariably results in water hammer. Recognize this “rattling” noise as a danger signal. Ignore this problem and eventually the hammering will rupture a tube.

Note that a tube in the exchanger, which has already ruptured, could cause water logging from other causes, such as corrosion. When the pressure in the steam space is lower than the pressure in the return line, no amount of over sizing of the steam trap will prevent water logging; we must somehow provide pressure differential across the trap. Fig. 24 shows an easy method to do this.

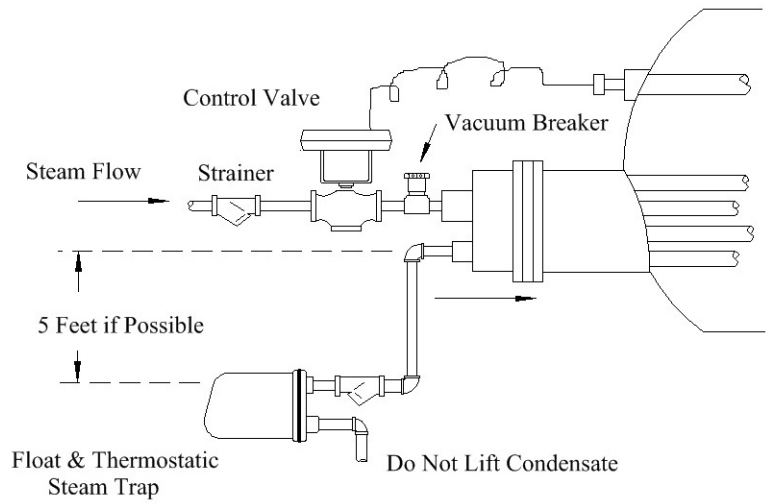

Fig. 24 Proper Trap Position Tank and Exchanger

To prevent the formation of a vacuum in the steam space, install a vacuum breaker either on the exchanger head or on the inlet steam header downstream of the control valve. This vacuum breaker is usually just a reverse check valve that opens to admit air to the steam space as soon as a vacuum begins to form. The pressure in the steam space thus can never fall below atmospheric pressure.

Arrange the piping downstream of the steam trap so that there is no backpressure on the trap. If necessary, drain the trap to atmosphere or preferably to a condensate return-pumping unit.

Keeping horizontal piping to a minimum, install the trap as far as possible below the condensate outlet of the tube bundle. This will provide a hydrostatic head on the steam trap. Condensate can now discharge even when there is atmospheric pressure both in the steam coil and in the return line.

Always use a float-thermostatic steam trap when a temperature regulator controls the steam supply. Size the trap to handle the condensate load that will exist when the pressure in the steam space is 0 psi. Use the method outlined in the previous example to determine the condensate load. The pressure available to force this condensate through the trap will be 1 psi for every two feet of head between the condensate outlet and the trap inlet.

If the condensate must be lifted to an overhead return main, water hammer will be inevitable unless the condensate is allowed to drain by gravity into a receiving tank, and then be pumped up to the return main either by a steam powered or an electric condensate-pumping unit.

Chapter 5

Air Heating

We previously covered air heating as it applies to comfort heating. Industrial applications differ as we handle greater volumes of air through each piece of heating equipment, and the steam pressure employed is generally considerably higher.

Conversely, the same trapping methods apply to industrial applications. To calculate the condensate load we use the desired CFM and temperature rise. That is:

$$\text{Condensate load} = \frac{\text{CFM x 1.08 x temperature rise}}{\text{Latent heat of steam}}$$

We mainly use heated air in industry to dry materials by blowing hot air over the material to be dried, picking up moisture on the way. To achieve an economical operation, it is important to reduce to a minimum the amount of heated air. In addition, the air passing through the drying equipment should be encouraged to carry away as much moisture as possible.

Many drying machines discharge great quantities of heated air carrying very little moisture. To incorporate considerable saving, adjust the speed of the air-moving fans to give the lowest rate of airflow that will result in satisfactory drying. Another way of saving heat is by recirculating the heated air whenever possible. The recirculated hot air can pass over the heating coil and when brought into contact with the wet material several times, pick up more moisture with each contact, before it is discharged.

The condition and requirement of each individual job determines the point at which the air is finally exhausted. The closer the air comes to its saturation point, the slower the rate at which it will absorb additional moisture. If recirculation occurs too many times, the drying rate is adversely affected.

Usually, instead of recirculating the air a certain number of times, then discharging it, a portion of the air is continuously exhausted, and replaced by fresh air. The air passing through the dryer then consists of a mixture of recirculated and fresh air.

The following Table may be of interest. It gives the amount of heat emitted by bare iron and steel pipe in air. When using pipes for heating air, the heat given off depends largely on the location of the pipes and the velocity of air over their surface. A large closely packed coil of pipes will be inefficient unless there is a means for moving the air quickly over the surface of the pipes.

The heat output will also depend on whether the pipes can heat by radiation as well as by convection. For these reasons, the values given in Table 9 are approximate.

The start-up load is usually much greater than the running load, thus use a generous safety factor (at least 3X) in selecting steam traps.

Table 8 Heat Radiation Factors

Approximate BTU given off per hr. per ft.
run of iron and steel pipe, per degree difference
in temperature between steam and air.

Temp Diff. between Steam & Air	3/4”	1”	1-1/4”	1-1/2”	2”	2-1/2”	3”	4”
50	.58	.68	.82	.94	1.22	1.46	1.68	2.76
75	.61	.72	.87	1.00	1.29	1.55	1.78	2.92
100	.65	.77	.93	1.06	1.37	1.66	1.89	3.12
150	.71	.84	1.01	1.15	1.49	1.80	2.06	3.40
200	.79	.94	1.13	1.28	1.56	2.02	2.30	3.80
250	.87	1.03	1.25	1.41	1.82	2.20	2.52	4.15
300	.96	1.14	1.37	1.56	2.02	2.42	2.80	4.60

Example: A coil made up of 200 Ft. of 1-1/4: steel pipe is used to heat a drying oven in which the temperature is 150° F. Using 15-psig steam, how much heat is given off by the coil.

The temperature of 15-psig steam is 250° F. Therefore, the temperature difference between steam and air is 250 - 150 = 100° F. From Table 5 we see that the pipe will emit .93 BTU/hr. per foot per degree temperature difference.

The 100 ft. of pipe will therefore emit .93 x 200 x 100 = 18,600 BTU/hr. By the way, this example illustrates the fact that bare pipe is not really a very efficient way of heating.

Evaporation

We will include under the general heading of Evaporation all processes in which liquids are vaporized. The term covers everything from the family wash drying in the wind to the concentration of sugar syrup and paper drying.

Evaporation takes place from the surface of a liquid, and may occur at any temperature above the freezing point of the liquid. The evaporated liquid does not need to rise to its boiling point, although the process of evaporation accelerates as the temperature of the liquid increases.

For example, consider a dish filled with water sitting on a table at room temperature. The water eventually will evaporate even though its temperature is no higher than 60 F or 70 F. If we increase the temperature of the water to 200 F, still below the boiling point, the water will evaporate much more quickly. If we raise, the water to its boiling point, it will vaporize in just a few minutes. The vaporization process is the same no matter what the temperature, but it occurs much more quickly when the liquid is heated.

As we mentioned above, we use the term “evaporation” to describe several different evaporation processes.

When evaporating a liquid so we can collect and condense the vapours, we call the process “distillation”. The product of a distillation process is the condensed vapour.

Evaporation performed to concentrate the solution or mixture, as for example in brewing beer; we simply call “evaporation”.

“Drying” is a third example of evaporation, the purpose of which is to remove moisture, usually water, from a material.

In any of these processes of evaporation, the transfer rate of heat from the steam depends on:

1. The temperature difference between the steam and the substances being dried or evaporated.

2. The heat transfer resistance caused by any insulating film such as scale, air, or water on the inside or outside of the heat transfer surface.

3. The surface condition of the steam heater wall and the construction material and thickness. Is it polished or rough, dirty or clean, etc.

4. The flow rate of the heated substance as well as the flow of steam over the heat transfer surface.

To evaporate a liquid as in distillation, first heat the liquid to its boiling point by adding Sensible Heat, to boil off the liquid use additional Latent Heat. Much more heat is required to boil the liquid than to raise it to its boiling point. That is, the maximum rate of heat flow is required when the desired liquid has reached its boiling point.

Thus, the importance of reducing the insulating effect of the film of air or condensate on the steam side of the heater is apparent when we realize that the greatest heat flow is required when there is the least inducement for the steam to supply it. That is, heat must transfer to a substance, which is at a temperature approaching that of the steam itself.

DISTILLATION

The process of distillation usually involves heating of the liquid to its boiling point by the addition of Sensible Heat and evaporation of the liquid by the further addition of Latent Heat. Remember that Sensible Heat and Latent Heat are both the same kind of heat. Sensible Heat raises the temperature of a substance, and Latent Heat changes the state.

Distillation can occur either intermittently in batches or continuously. In batch distillation, raise the liquids from room temperatures to the boiling point, and then distill. When distillation is complete, another batch cycle of liquid is processed.

The condensate load is therefore very heavy in the early stages of heating, gradually decreasing as approaching the boiling point, since the rate of heat transfer and the rate of steam condensation depends on the temperature difference between the steam and the liquid. This confirms what we said earlier - when we would like to have the greatest rate of heat transfer i.e. during the boiling period when large quantities of Latent Heat are required, the rate is actually low because of the small temperature difference between the steam and the liquid.

Since the initial rate of condensation is high, the pressure in the steam space is low. As the liquid heats up, the rate of condensation falls off and the pressure rises. This, then, is another case where the maximum condensate load occurs when there is the minimum pressure available to force the condensate through the trap.

To meet these conditions, we require a high capacity steam trap at the low starting pressure but which is also capable of working satisfactorily at the higher running pressure. We have already seen why it is important for the steam space to be free of condensate, so this is particularly true when trying to obtain distillation temperatures where a vast amount of heat is being transferred to the liquid to boil it. Continuously discharge condensate to maintain the temperature of the distillate. A heavy blast discharge such as obtained with a bucket trap causes sudden rushes of steam into the heater to take the place of the condensate discharged by the trap will give variations of heat transfer rate and distillate temperatures, which are undesirable.

In a continuous distillation process conditions are generally steady. Distillation is continuous, additional liquid replaces that in the Still which has boiled off. Fig. 25 shows a typical continuous Still. Preheating the liquid in a separate vessel, allows the Still to provide only the Latent Heat necessary to boil the liquid as the distillate already reached its boiling point in the pre-heater.

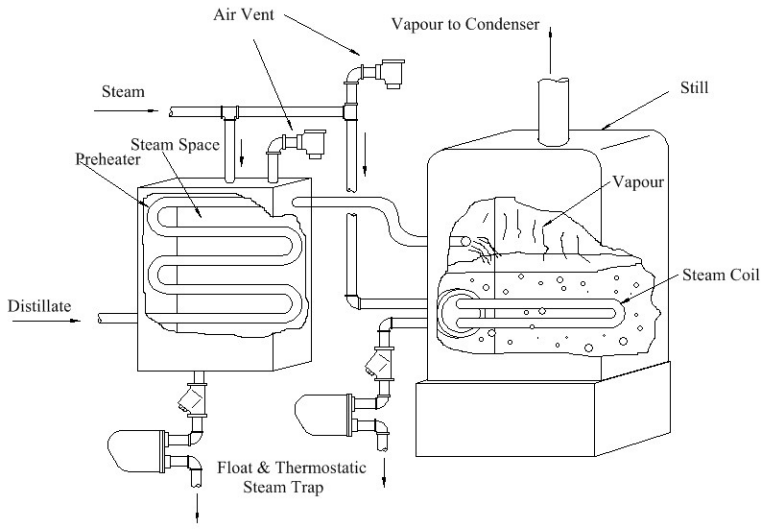

Fig. 25 Continuous Still with Preheater

The heaviest condensate load will occur on start-up and even though this occurs less frequently than in the batch process, account for the start up load when selecting the steam trap.

For both batch and continuous Stills, the ideal steam trap is one that will discharge continuously under a variety of pressure conditions. Consider a cyclic discharge steam trap only if it does not release large volumes of condensate at each discharge. These requirements indicate that by far the best choice is the float-thermostatic steam trap. A second choice might be a thermo-dynamic trap if the pressure at the trap is at least 10 psi or, for small Stills, a balanced pressure thermostatic steam trap may be considered.

Whatever type of steam trap you select, install it in a manner to avoid steam locking, or if this is not possible, use a trap fitted with a steam-lock releasing device. The effect of steam locking causes partial water logging and loss of output; during the time the trap is steam-locked the distillation temperature will fall, rising rapidly when releasing the steam lock. These variations in distillation temperature can seriously affect the quality and purity of the product.

The release of air and other non-condensable gasses from a Still heater is of great importance if you wish to maintain the maximum rate of heat. The same general principles of air venting apply as to any other type of steam-heated equipment.

Steam-to-Steam Generators

Sometimes referred to as re-boilers, these units generate pure steam from either city water, distilled water, de-ionized water, or reverse osmosis water. The re-boiler produces steam in a pure state with no added chemicals or other properties which will taint the process which uses this pure steam. The beverage industry, food industry and pharmaceutical industries use pure steam to either clean equipment or mix with products that they produce for human consumption.

The re-boiler generally is a large heat exchanger with controls to maintain a specific water level inside the shell. Conventional steam passes through the tubes, heating the clean water in the shell. The heat exchanger has sufficient heating surface to allow the temperature of the water to increase beyond 212º F and raise the temperature of the water to the desired steam pressure.

Clean steam draws from the top of the heat exchanger and immediately is replaced by cooler water entering the heat exchanger and the cycle is continued. These same principals apply to a small boiler with one exception we are using saturated steam to heat the pure water instead of the conventional gas, oil or electricity.

All wetted parts of the heat exchanger and other devices that are in contact with the pure steam use a food grade stainless steel material in its construction. Similar control devices that a conventional steam boiler would use such as high and low water alarms, low temperature alarms or cut offs, gauge glass sets, level controls and safety valves are an integral part of this system.

These units are also engineered to meet that special installation or condition.

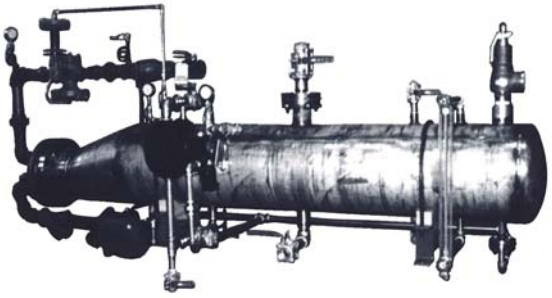

Fig. 26 Steam to Steam Generator

Open-Type Evaporators

The steam-jacketed pan or kettle is a typical example of an open evaporator. Under the heading of Food Manufacture Special Types, we deal with combined functions of cooking and evaporation. A standard jacketed pan as is used in the chemical industry for concentration of liquids is shown in Fig. 27

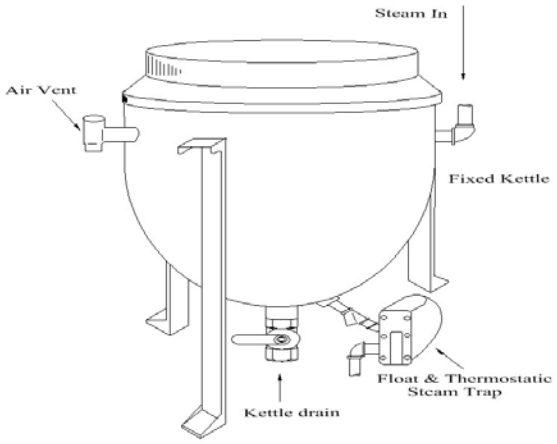

Fig. 27 Open Evaporator

Generally, the use of these pans is to remove a certain amount of moisture from a mixture as, for instance, when heating maple syrup to thicken it. In many cases, the material of the pan itself (e.g. a porcelain lining) is a very poor conductor of heat. It is therefore important not to make matters worse by the inefficient discharge of condensate and air.

The starting load is heavy compared to the load at maximum temperature as in the distillation processes considered previously, and the pressure in the jacket during start-up will be considerably lower than line pressure.

For these conditions, a continuous discharge float-thermostatic steam trap would be the most suitable, especially for large pans working on low steam pressure. Smaller pans may be fitted with a thermodynamic steam trap if the steam pressure is high enough or a balanced pressure thermostatic trap.

Evaporating kettles usually have a drilled, trapped connection at the top of the jacket, for hydraulic pressure testing of the kettle. Use this tapping to connect the air vent, which is a very important part of the installation. As we mentioned earlier in the course, air must be removed quickly and completely from the steam jacket to allow the steam to fill as much of the jacket as possible.

Pay careful attention to the size of the steam supply piping to all types of evaporators. It is common even on open evaporators for condensation of the steam to take place so rapidly during initial heating up that the unit forms a vacuum in the jacket. This vacuum, of course, prevents the condensate from running out and draws in air, which as we know causes problems and removal from the system is required. Correct sizing of the steam inlet piping will prevent “steam starvation” and will improve the output of the kettle. Test pressure gauges fitted to the pan jacket will quickly show whether the steam supply is adequate.

Closed Type Evaporators

Closed evaporators are in principle very similar to stills. The tubes may be horizontal or vertical, and the steam may be either inside or outside the tubes. Trapping problems are similar to those encountered in open-type evaporators (i.e. A heavy starting load with steam pressure lower than normal), and the use of a float-thermostatic trap is again indicated. Correct venting of air and non-condensable gases is very important, and the position of the vent point must be carefully determined.

Film Evaporators

When boiling some liquids foam forms. Film evaporators take advantage of this fact. These may be either of the “falling film” type Fig. 28 or he “climbing film” type Fig. 29

The falling film evaporator consists of a double bank of vertically stacked steam jacketed pipes arranged so that the liquid can flow in the top and out the bottom of the evaporator, becoming more concentrated as it moves downward. Correct piping practice is to individually trap each section to avoid steam locking. For light load application you could possibly cascade the steam and condensate from chamber to chamber and install a single trap at the bottom.

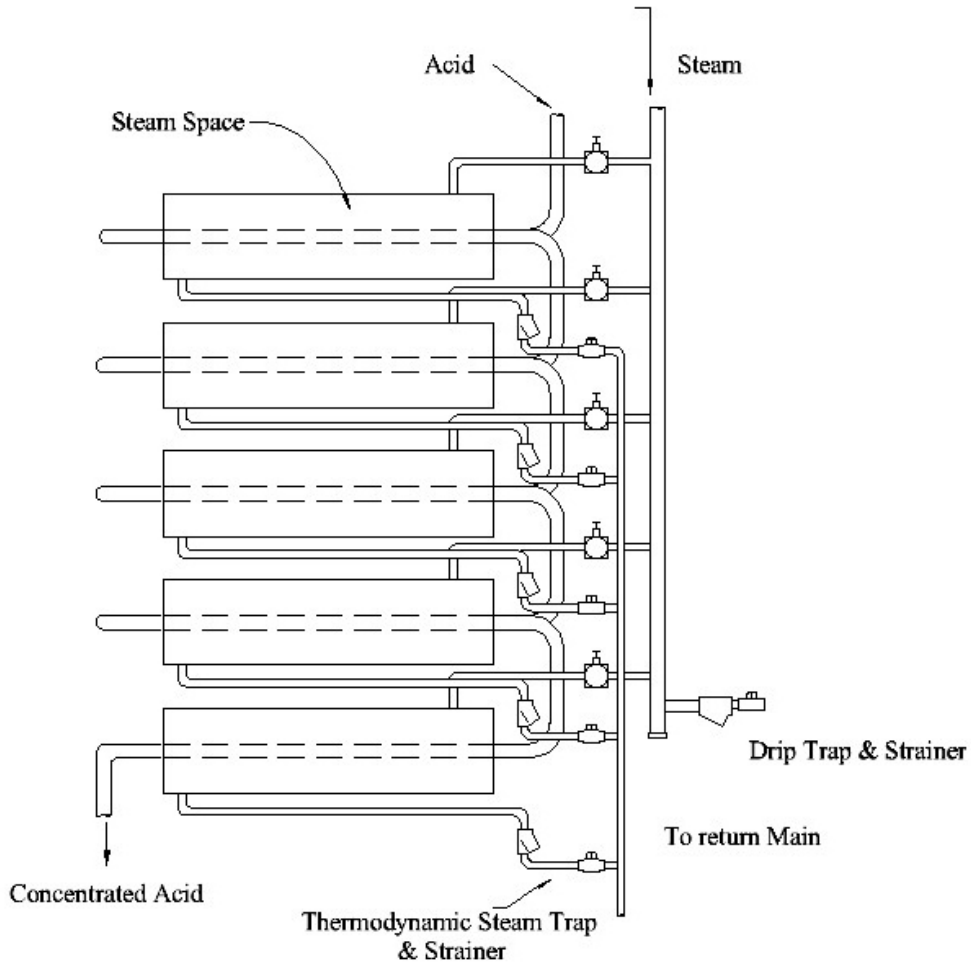

Fig. 28 Falling Film Evaporator

The starting load on an evaporator of this type is not appreciable greater than the running load, but it is still possible for the condensation rate to vary considerably because of fluctuations in the rate of liquid flow. The illustrated evaporator for example, produces concentrate sulfuric acid. The controlled rate of acid flow is to suit conditions in subsequent processes and was subject to wide variations. Installing thermodynamic steam traps are necessary as space is at a premium.

In the rising film evaporator shown in fig. 29, the liquid flows into the bottom chamber and rises about half way up the tubes, which steam surrounds. The liquid foams as it boils, and rises farther up the tubes where it evaporates. The vapour passes through the separator to atmosphere and the concentrated liquid discharges from the side of the unit.

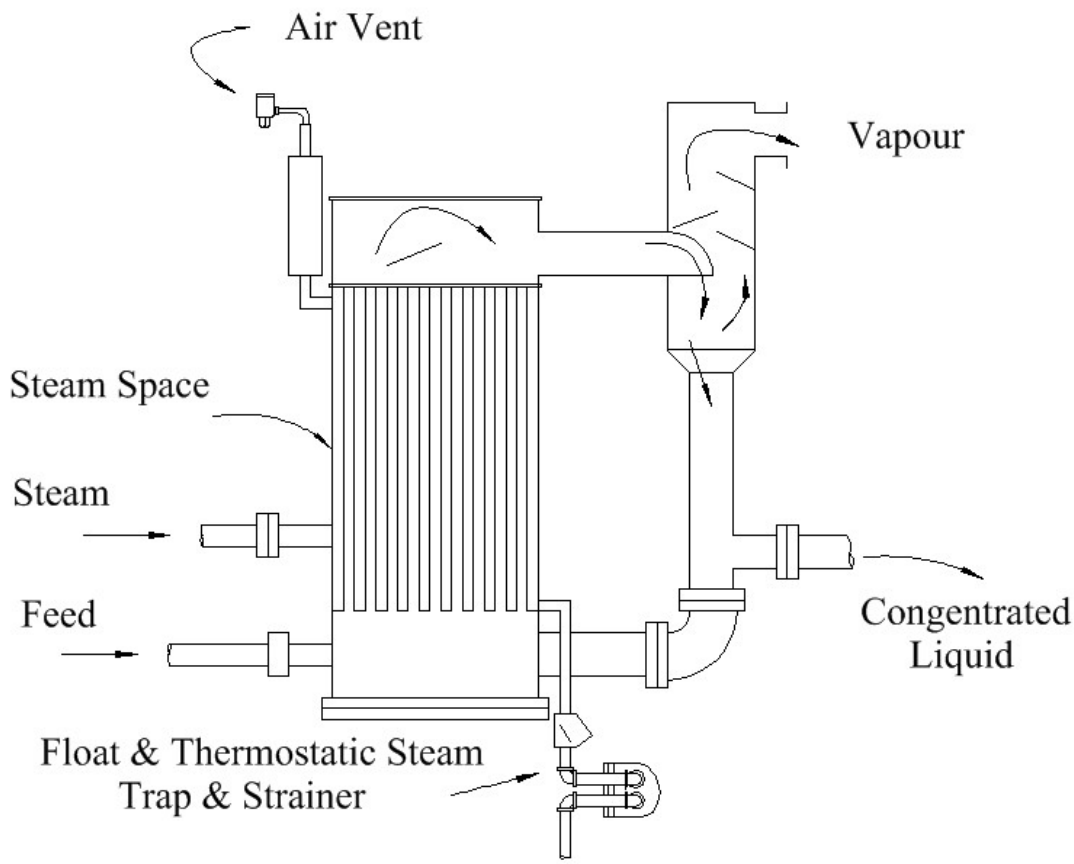

Fig. 29 Climbing Film Evaporator

A float-thermostatic trap would be best choice for this equipment, but you can consider the thermodynamic or inverted bucket trap.

More important is the elimination of the air that will tend to collect at the top of the steam space. Install an automatic thermostatic air vent at the highest point of the steam chamber.

Industrial Drying

When the extracted amount of moisture is relatively small, we term the evaporation of moisture as “drying”. It is usual when drying solids to remove as much moisture as possible mechanically. In laundries for example, blankets do not go directly from the washing machines into laundry dryers. They first remove as much of the water as possible by a spin-drying operation. Paper has a large portion of its moisture removed by suction from below the sheet forming wire, and later by pressing the sheet between rollers. Drying of raw wool commences after washing by squeezing between rollers before being run through the steam heated dryer. The mechanical removal of water has a very important bearing on the steam consumption per pound of product dried, and therefore on drying costs.

Consider another important factor, “regain”. Many dried materials absorb moisture, and in their natural state always contain a certain percentage of water. Wool, cotton, and paper are examples of materials, which will when removed from the dryer completely dry, begin to absorb moisture as soon as they reach the open air. For this reason, it is poor economy to dry such material completely since soon after removal from the dryer they will absorb additional moisture anyway; only dry them to the natural state in which they exist in the open air.

Many different types of drying equipment are in current use. Although we cannot hope to consider them all, we will investigate a few representative examples.

Paper Machines

Machines for making paper consist of a number of cylinders, from 5 or 6 to as many as 120, over which a continuous length of paper passes successively, gradually becoming dryer until the finished product is reeled off the dry end of the machine.

Control the temperature of each cylinder to give a predetermined temperature gradient from cylinder to cylinder over the length of the machine. To accomplish this, we regulate the steam pressure in each cylinder by means of the inlet valve. The temperature across the length of each cylinder must be uniform or the paper will dry unevenly, producing a substandard product.

Paper machines generally run at low pressure - usually below 25 psi. Steam feds through the axis of the cylinder, and the discharge of condensate passes through the same fitting. In modern machines, only one gland is used see Fig. 30. Steam is fed and condensate discharged by a rotary joint.

The condensate lifts to the discharge tube by means of either a system of buckets, which scoop the condensate from the bottom of the roll or a siphon tube.

In the past, it has been the custom to treat all the cylinders of the machine as one heating unit, using one trap to drain the entire machine, or else to sectionalize the machine by using one trap to drain a number of cylinders. As we learned earlier in the course, this method of draining makes it impossible individually to control the pressure in each cylinder; since connecting each trunnion to a common exhaust pipe, the pressure will balance throughout the machine without regard to the steam inlet valve position.

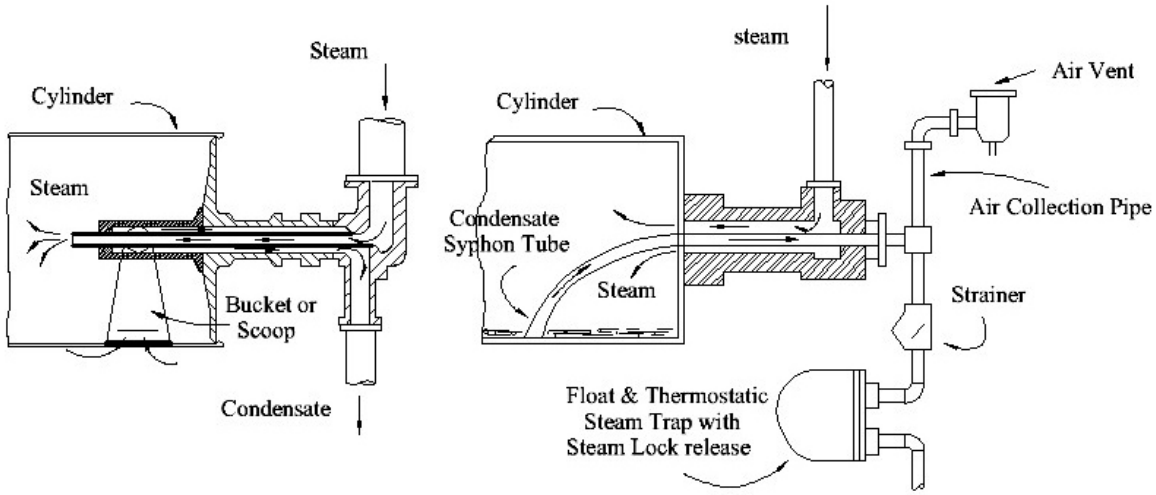

Fig. 30 Rotating Cylinder Drainage

Control of the temperature gradient throughout the machine is thus impossible. Group trapping also causes trouble because of the widely differing condensate loads in each cylinder. Treat every cylinder of a paper machine as a separate steam unit. If each unit has its own steam supply valve, drain trap and air vent it can be made to give maximum heat output at the most suitable temperature and provided that the cylinder wall thickness is uniform, even temperature can be maintained across the cylinder face. By regulating the steam inlet valves, the temperature gradient from cylinder to cylinder over the length of the machine can be set to suit the produced paper.

Paper machine cylinders must have thick walls to support themselves, and the steam consumption when heating up this mass of metal is great. The steam space is also very large and, when cold, contains a considerable quantity of air. One of the main problems in trapping these cylinders is the removal of the heavy starting load of air and condensate quickly. It is extremely important to have the steam space free of condensate and air when running. Because steam surrounds the condensate discharge tube for much of the time, any steam trap used will be subject to steam locking. For this reason, install a float-thermostatic trap with a "steam lock release valve" on each cylinder. Also on the outlet of each cylinder there should be fitted an air collecting pipe and high capacity automatic air vent.

Anybody who faces the problem of trapping a paper machine may write to us for additional information on the subject. The trap-air vent combination referred to above is available as an assembled unit.

Textile Drying Cans

The use of Multi-cylinder machines in textile piece drying and in the dyeing and finishing industry, are very common. The cylinder steam supply normally comes from a common steam header, and the condensate discharges into a common condensate return header. Although there is the same need for individual cylinder draining on this equipment as on any other multi-cylinder machine, the construction usually makes group trapping necessary. When separate trapping of each cylinder is impossible, the common headers of the machine should be fitted with float-thermostatic traps of ample capacity, and fit air vents at frequent intervals on each condensate header. When the arrangement cylinders are in vertical banks, we recommended installing an air vent on each cylinder header with a float-thermostatic trap and strainer at the base of each header.

Rotary Dryers

Rotary dryers are machines in which the material to be dried is agitated in some manner and at the same time brought into contact with a series of steam tubes in a revolving drum see Fig. 31.

To considerably improve the efficiency of this type of dryer, use the correct steam trapping and air venting installations. Because of the construction, a proper drainage system is not always easy to arrange and air binding is a common fault. In these dryers, there is a tendency toward steam locking depending on the design of the individual machine; although the danger may not be quite as great as with the average cylinder dryer.

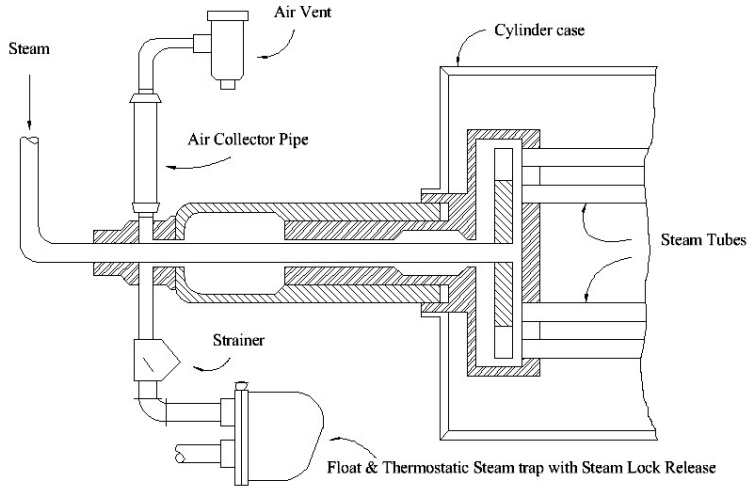

Fig. 31 Rotary Dryer Drainage

Some machines have a steam inlet nozzle at one end and an exhaust nozzle at the other end of the revolving drum. Others have a combined steam and exhaust nozzle. The conditions governing the selection of the steam trap will be the same in each case.

The trap for these revolving tube dryers must be capable of passing a heavy condensate load during the warming up period and must be equally efficient in handling the much lighter load when the machine is hot. The trap must also be one that cannot steam lock. These requirements indicate the use of a float-thermostatic trap fitted with a steam lock release.

As with cylinder dryers, air venting is very important, and the most suitable location for the air vent is at the exhaust nozzle. Again, the recommended method is to have a short length of air collecting pipe with a thermostatic air vent on top.

It is very important with this type of dryer to tilt the unit so that the groups of revolving tubes tilt towards the outlet end. Without this tilting effect, there is a good chance that water logging and possibly water hammer will occur.

Calendars and Ironers

Steam heated bed calendars and ironers are the same. They consist of some type of roller, which may or may not be filled with steam running in a “bed” which is, in effect, a large steam chest see Fig. 32. Laundries and linen factories mainly use this equipment.

When the machines are of the multi-roll type, it is always an advantage to have separate drainage of each bed section because of the wide difference in condensate load between the wet and try ends of the machine. In a multi-roll laundry mangle, for instance, the wet clothing enters at one end and leaves dried at the other end. The bed at the wet end must do most of the drying work and hence has the heaviest condensate load. The condensate load decreases toward the dry end of the machine.

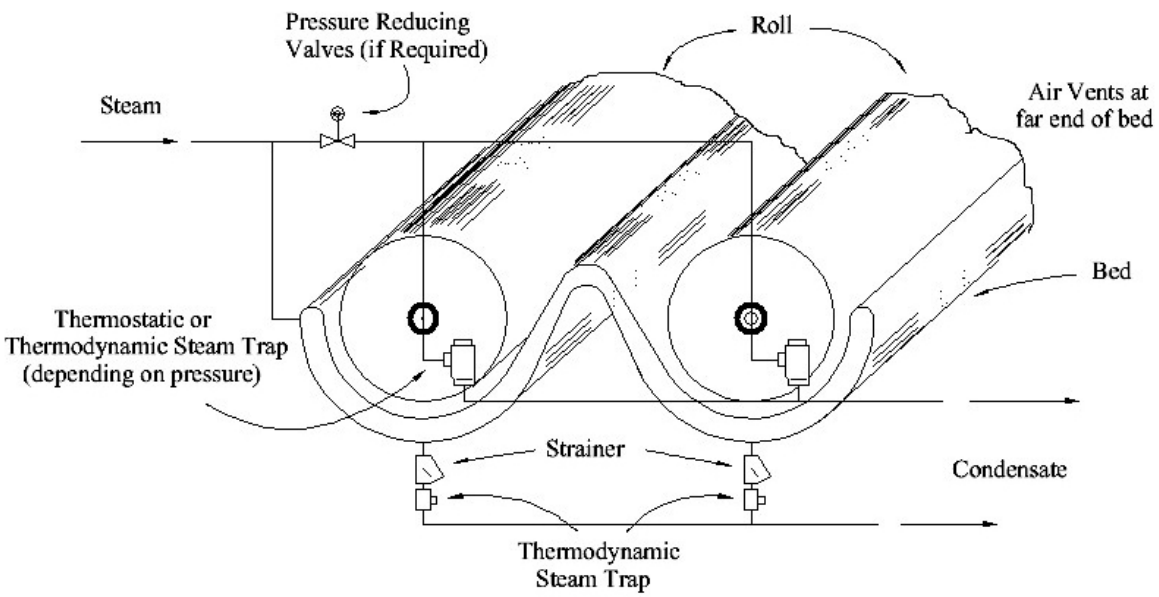

Fig. 32 Multi - Roll Ironer

In some cases, it may be necessary to individually drain only the first two wet end sections and then drain the rest of the sections either in pairs or all thorough one trap. In all cases, remember, that individual trapping could increase the ironing speed by as much as fifteen feet per minute.

With all rotary type dryers, the most effective trap to use is equally effective on heavy starting loads as well as running loads.

Experience has shown that the thermodynamic trap is again the best choice for draining calendar beds, with the float-thermostatic trap running a close second. Usually, in fact, space is so restricted that the thermodynamic trap has quite a large advantage over the float trap, since it is much smaller and its rapid cycle discharges condensate before it has much time to back up.

When the rolls and the beds are heated, the steam consumption in the rolls drops considerably after the initial heating up. The traps on the rolls will not have the same amount of work to do as the trap on the beds. In this case, the balanced pressure thermostatic trap will usually be quite satisfactory.

Air removal from horizontal calendar and ironer beds is extremely important. On most equipment of this type, the manufacturer provides air cocks on the horns of the beds. In practice, however, the cocks are rarely used except in starting up the machine and sometimes not even then. It is, or course, during the starting period that the largest volume of air is present and air is a concern as long as steam is supplied to the machine. Provision must be made to eliminate this air continuously.

The horns of the bed form natural collection points for the air which is present on start-up and that which enters with the steam. A general practice is to install automatic air vents on the high points of the horns. The most convenient method of fitting the air vents is to connect each pair of horns with a short length of pipe and to fix the air vent on this pipe, midway between the horns as in Fig. 33. Proper venting of the beds can make a surprising difference to machine speed, sometimes as much as 15%.

The volume of air to be cleared from steam heated rolls when they are used will be much less than that to be dealt with in the beds, and it is rarely necessary to provide separate air vents when the rolls are individually drained.

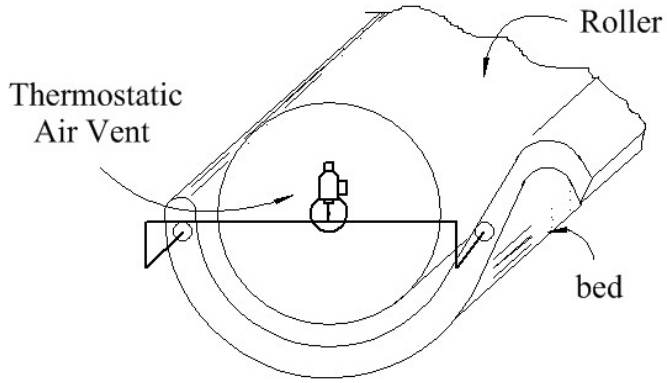

Fig. 33 Ironer air Venting

In some cases a lower steam pressure is used in the rolls than in the beds. It may then be an advantage to install a flash tank on the outlet from the beds, utilizing the flash steam in the condensate from the rolls. We will examine this idea in more detail in the section on flash steam to follow later in the course.

Stacks of vertical calendars such as are found in paper mills and in jute and linen factories require different treatment from the steam heated bed calendars used in laundries. There are no beds to trap, but the condensate load in the rolls is heavier and conditions of steam pressure and condensate load are more constant.

Given these conditions, use thermodynamic traps on the rollers, there is a definite advantage to using these traps whenever possible because of their small size, rapid cycle and ease of maintenance. Drain each roller with its own steam trap and strainer and discharge the condensate into a common condensate return header. The steam header to the rollers should be drained at its base, again with a thermodynamic steam trap. Install a thermostatic air vent at the top of the header.

Chapter 6

Cooking with Steam

Steam cooking in the food industry may bring the steam into contact with the food containers as in canning retorts, or the cooking is preformed using steam-jacketed or coil-heated vessels. Because of the similarity of the process although the end product is very different, open rubber vulcanizing and hospital equipment sterilizing are included in the description of the draining and air venting methods used for cooking equipment.

Batch Type Canning Retorts

A retort is simply a vessel, where after packing food into jars or cans, the product is cooked at the desired temperature for a specified time. They are usually in the form of a rectangular container, although cylinder types are available depending on the products being cooked. The unit has a door at one end that is steam-tight when closed as in Fig. 34. Usually the steam connection is at the bottom of the retort to promote circulation within the unit. To efficiently remove the condensate, the condensate drainage connections made on the bottom and in the middle of the unit. Install all cold water, compressed air, and air vent connections on the top of the retort.

After packing the cans or jars of food into the retort, the door is closed, and sealed. After turning the steam on the pressure will slowly rise as steam fills the space, pushes out excess air and the contents begin to heat. To ensure heat penetration to the center of the contents of the can, the temperature of the retort is held at a predetermined level for a certain length of time.

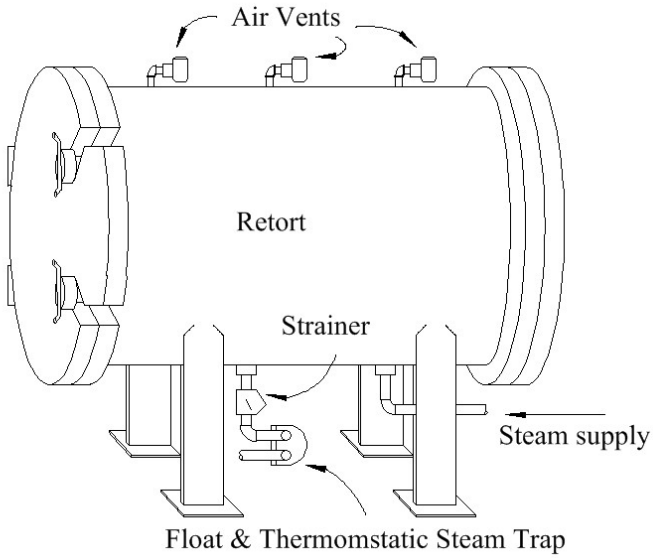

Fig. 34 Batch Type Canning Retort

As you can appreciate, there is air present in the retort when admitting the steam so do not assume that the pressure in the retort is necessarily an indication of the temperature. For this reason, it is advisable to have an indicating or recording thermometer and preferably, a temperature-regulating valve fitted on the steam supply.

At the end of the cooking cycle, water cools the cans. The effect of suddenly releasing the pressure from the steam space may cause the internal pressure in the cans to distort them. To prevent this, admit compressed air at a pressure 2 or 3 psi greater than the steam pressure to the retort. This partially cools the cans and makes it possible to admit cooling water without spoiling the product.

Characteristics of this equipment which need consideration when selecting a steam trap, are as follows:

1. Because of the mass of the retort and the cold cans, there is a very heavy starting load of condensate at low pressure. There is a large volume of air in the retort and in pockets between the cans.

2. Deliberately introducing compressed air, which will escape through any automatic air vents unless they are manually or automatically isolated.

3. During the cooling cycle, it is necessary to remove a large volume of cold water from the Retort.

4. There will probably be grease and other debris on the outside of the cans. This could enter the steam traps causing failures and malfunctions in the operations.

Efficient trapping is obviously a problem. Proper air venting is also very important since the cooking depends on the steam temperature, not its pressure, and maintaining the correct steam temperature to achieve proper heat penetration is critical. However, because of the air and water admitted for cooling, proper steam trapping and air venting is not the entire solution. The control equipment must be so interconnected that when starting up, the traps and air vents are in action; upon turning on the air during the cooling process, it must not escape thought the vents, while allowing free removal of the cooling water. A suitable selection of steam trap is the float-thermostatic type because of the high starting load and its ability to operate at low pressures.

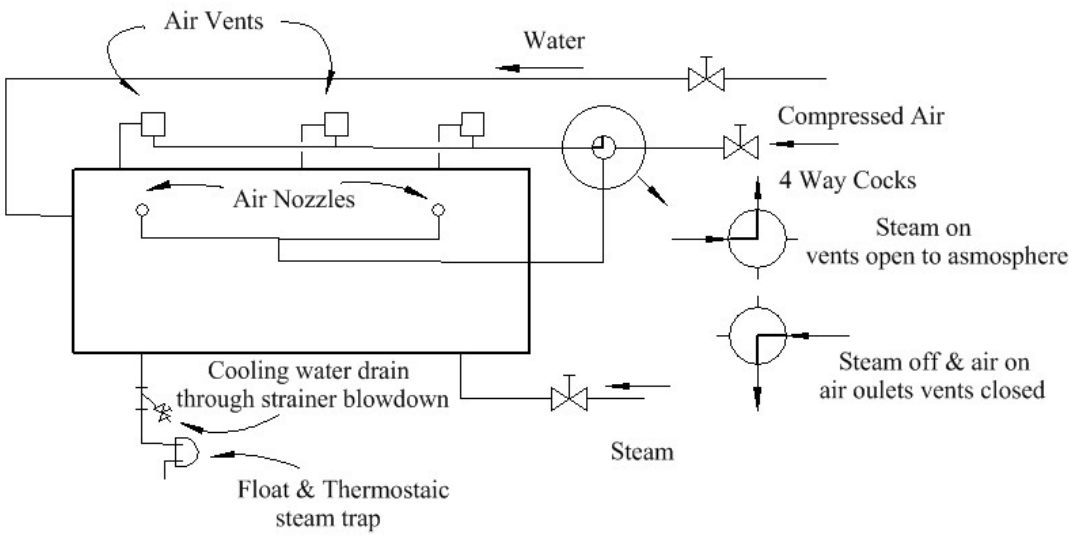

Fig. 35 Canning Retort Piping

Install a large strainer, probably 2" size before the trap to take care of the debris from the cans. Install automatic air vents at suitable points on the top and sides of the retort; their position will depend on the location of the steam inlet and the normal direction of steam flow as typically shown in fig. 35.

Continuous Type Canning Retorts

The use of continuous retorts for cooking and sterilizing, are mainly for fast and large production runs. The product travels through a separate cooking and cooling chamber. Preheating of the empty Retort means that the running load is not excessive, and the steam consumption will only increase slightly as the moving containers travel into the machine. Select a float and thermostatic or possibly a thermodynamic trap, in conjunction with a strainer. As with the batch type retort, automatic air vents are necessary to keep the chamber of the Retort full of live steam.

Coil-heated Canning Retorts

In this canning Retort, live steam does not come directly into contact with the containers, but is used to generate steam by means of a coil submerged in water in the bottom of the retort. Condensate returns are now free from contaminates and can be return to the boiler by the boiler feed unit without concern. The trapping of Retorts of this type is the same as for coil-heated vessels in general.

Air venting of the Retort chamber is necessary in order to release the air, which remains in the vessel when the lid is closed.

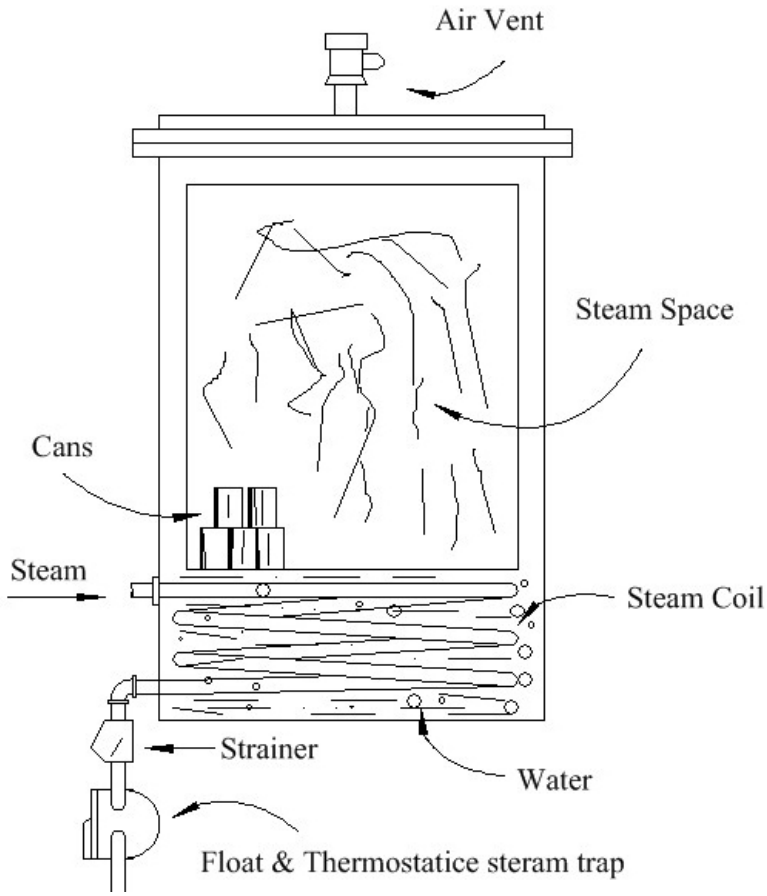

Fig. 36 Coil Heated Canning Retort

The airflows upwards by rising steam from the boiling water in the bottom, thus install the air at the highest point. Fig. 36 shows a Retort of this type fitted with a float-thermostatic trap, strainer and air vent.

Open Type Rubber Vulcanizers

In many respects rubber vulcanizers are very similar to direct steam Retorts, and so will be considered in this section. After placing, the vulcanized material in a closed vessel similar to a Retort, we feed live steam into the chamber. This equipment differs from the canning retort in that the chamber has an enclosed steam jacket shown in Fig. 37.

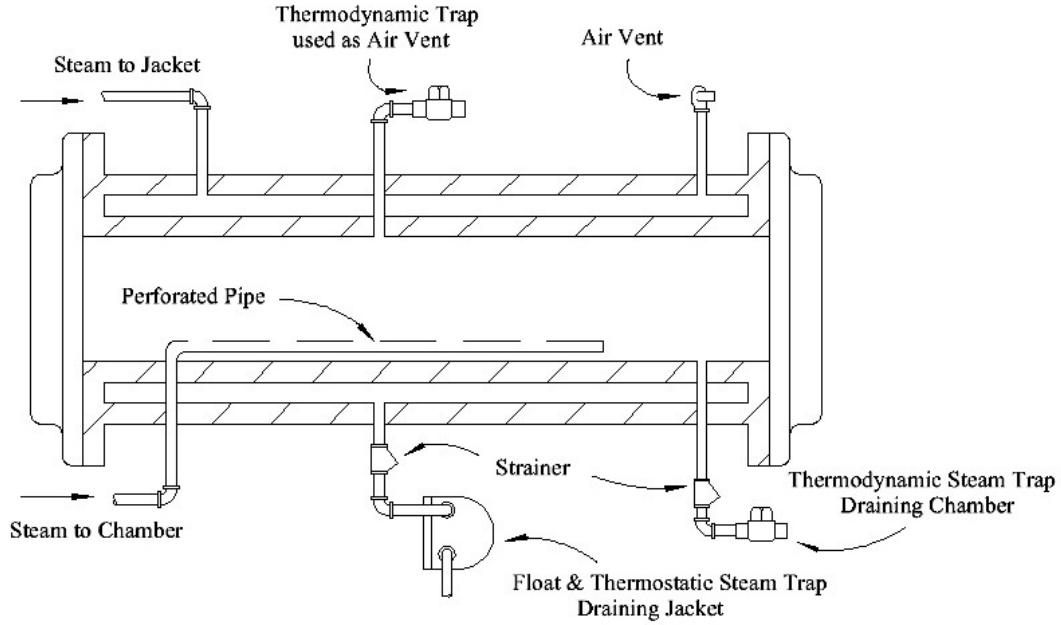

Fig. 37 Open Type Rubber Vulcanizer

Maintaining a steam supply to the jacket, even when the cover of the vulcanizer is open, will keep the temperature of the unit uniform. Therefore, apart from the initial start up load, the condensate load on the jacket is reasonably steady. Trapping the jacket, therefore, is no problem and simply calls for a trap capable of handling the startup and working loads. Use a float and thermostatic steam trap for large vulcanizers, and a thermodynamic or balanced pressure thermostatic trap for the smaller types. Again, always install automatic air vents on the jacket.

The chamber of the vulcanizer presents a more difficult problem because of the corrosive gasses produced by the action of the steam on the vulcanizing chemical. These gases dissolve in the condensate and rapidly attach non-ferrous parts of the steam traps and automatic air vents. Efficient draining of the vulcanizer chamber is obviously necessary. Select traps and strainers that have corrosion-resistant bodies, screens, and working parts. The stainless steel thermodynamic steam trap is ideally suited for this job. A strainer with a stainless steel screen should, be fitted before the trap.

Automatic air vents present more of a problem if manufactured with a bronze bellows, which are subject to corrosion and will need periodic replacement. We suggest using a thermodynamic steam trap as an air vent with this type of equipment.

This trap will operate effectively as an air vent so long as there is a slight amount of steam mixed with the air. Perfectly dry air or compressed air under pressure will cause the trap to close, but in this case, the air will discharge quite effectively since a certain amount of moisture will be present.

Autoclaves used in the manufacture of concrete blocks also present the same trapping difficulties. The use of thermodynamic steam traps solves the problems.

As you know, condensate from cooking Retorts, open Vulcanizers, Autoclaves, or any other equipment where live steam is used directly for heating should not be returned to the boiler feed tank because of possible contamination of the condensate. This hot corrosive condensate can, however, be passed through a heat exchanger to heat the boiler feed water.

Steam Jacketed Kettles for Evaporation and Cooking

The cooking and evaporating processes use a wide variety of steam-jacketed vessels. Users of steam-jacketed pans seem to be addicted to the use of a cracked valve or plug cock for condensate drainage instead of a steam trap. This is probably because of the difficulty sometimes encountered in trapping this equipment properly.

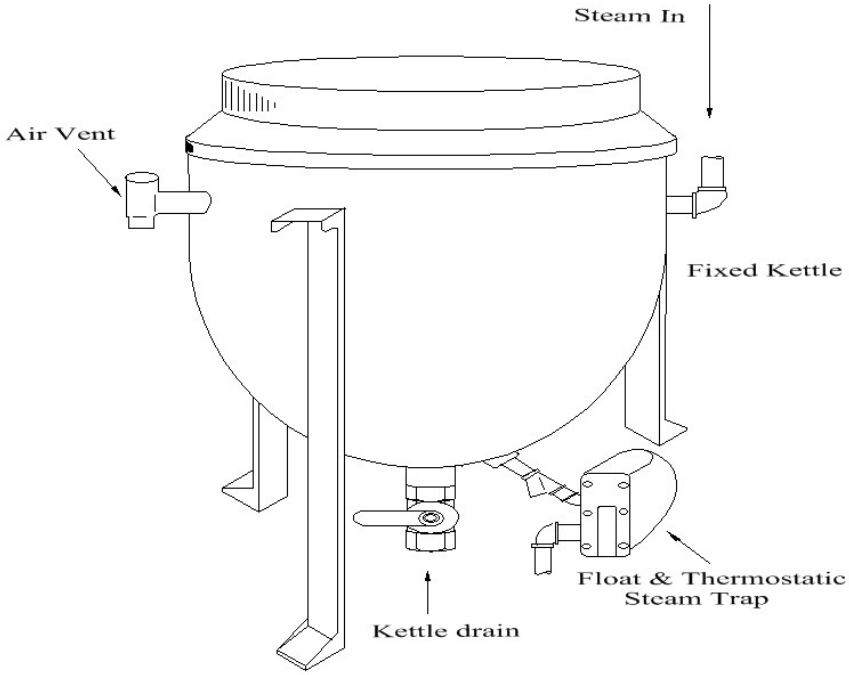

Fig. 38 Steam Jacketed Kettle

A typical jacketed kettle shown in Fig. 38 shows the steam inlet is at the side of the kettle and the condensate drains from the bottom. Before turning on the steam, the jacket is full of air. When introducing steam, air pushes ahead of the steam, forcing some to the upper part of the jacket, some to the trap, and the remainder mixes with the steam.

Installing a bucket trap on this type of kettle, with this large amount of air will probably cause the kettle to air bind, reducing the efficiency of the kettle. Similarly, not including air vents on the jacket will allow the large accumulation of air at the top of the jacket to slow down the cooking process.

On the other hand, during start up, cracking open a valve by the operator, will quickly release the initial air even if some of the air-steam mixture escapes. The result is a high rate of heat transfer and the pan quickly heats up. However, the process can waste a great deal of steam when this method is used. Proper steam trapping and air venting allows the pan to heat up just as quickly, while saving on the amount of steam being used.

We will consider now the proper trapping and air venting methods for several representative types of jacketed kettles.

Fixed “non-tilting” Production Kettles

The first point considered is the elimination of the air in the steam jacket. As was mentioned earlier in the course, most of the air will collect at the point most remote from the steam inlet. Therefore, install the air vent at the top and on the side of the jacket opposite the steam inlet. In some cases, more than one air vent will be required.

The condensate load in this type of equipment is subject to wide variations. The starting load may be as much as ten times the running load. The pressure in the jacket also varies widely. When initially introducing steam the rate of condensation is extremely high, the pressure will be very low and will gradually increase as the kettle comes up to temperature. Since there is a wide variation in load and pressure, use a float-thermostatic steam trap whenever space permits and apply a liberal safety factor of 3 or 4 times to accommodate the starting load if quick boiling is required. If there is not room below the pan to install a float-thermostatic steam trap, it is better to install a thermostatic or thermodynamic trap close to the pan. If the float-thermostatic steam trap was installed at some distance from the pan this, or course, could cause steam locking and poor performance.

Small kettles in which rapid heating up is not of primary importance may be fitted with a balanced pressure thermostatic trap. All jacketed kettles, large or small, require proper air venting.

Tilting Production Kettles

A tilting kettle, which allows the product to be poured from the kettle, presents a particularly difficult trapping problem. The condensate, which of course collects in the bottom of the pan, must discharge through one of the trunnions on the top of the kettle.

Steam locking will always be a problem in this type of unit as steam always surrounds the condensate return channels. Use a balanced pressure thermostatic steam trap on smaller units, but larger kettles should be fitted with a float-thermostatic steam trap with steam lock release for best results. Air vents are, of course, still required on this type of kettle.

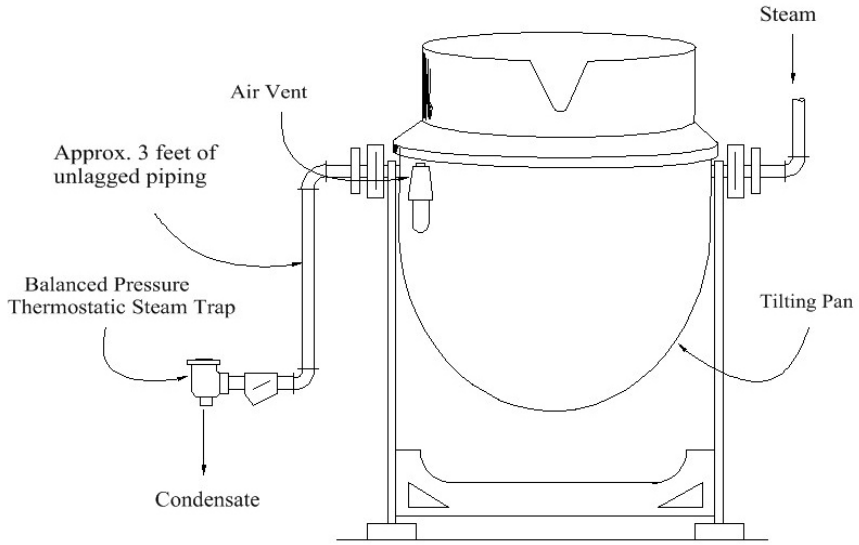

Fig. 39 Tilting Production Kettle

Quick-Boiling Kettles

In certain processes, a particularly rapid boil of large quantities of material is required. Simply using a bigger kettle to contain the increased volume causes difficulty because this automatically reduces the heating surface available per pound of product. The volume of a hemispherical pan varies as the cube of the diameter, whereas the area of the heating surface increases only as the square of the diameter. This means that doubling the diameter of a pan of this kind would increase the volume by eight times but would increase the heating surface by only four times, actually reducing the heating surface per pound of product by half. Since the determining factor in deciding the boiling time is the heating surface per pound, the time required to boil the material would be doubled.

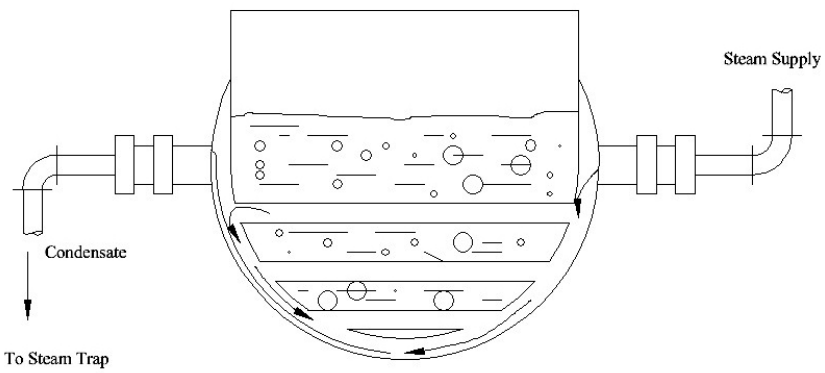

Fig. 40 Quick Boiling Kettle

To overcome the difficulty of having to treat batches in small kettles to shorten the boiling time, extra rapid boiling kettles are fitted with an internal steam heating coil. This coil increases the effective heating surface, in some cases to double that of a plain-jacketed kettle, to reduce the boiling time considerably.

The internal coil and kettle are fed from a common steam supply and use the same return line as shown in fig. 37. Kettles of this type use the same

principles of condensate removal and air venting as a plain kettle. Take care in choosing a trap which has sufficient capacity to handle the increased rate of condensation resulting from the internal coil. Another type of kettle with an internal coil as shown in fig. 41 needs special consideration and attention.

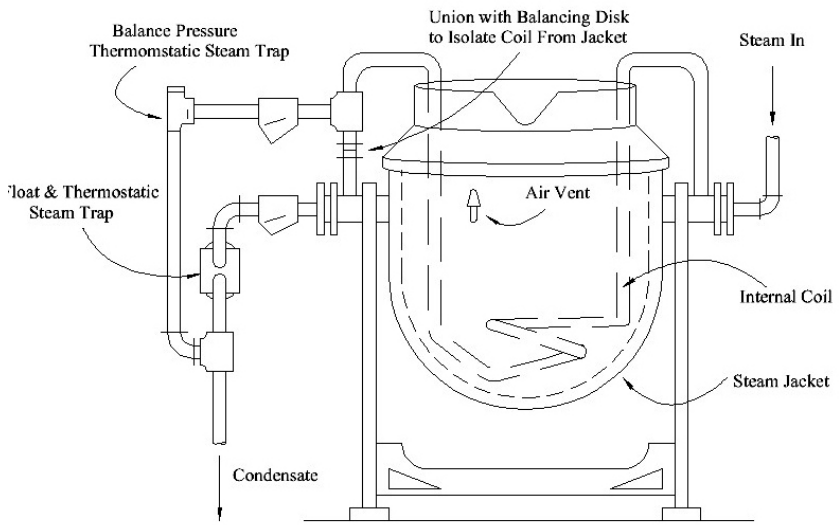

Fig. 41 Tilting Pan with Internal Steam Coil

The steam supply for the internal coil is from the inlet trunnion, the condensate drains into the exhaust trunnion, giving an Ejector effect, which induces a flow of condensate up the siphon pipe draining the steam jacket. The original design of this type of kettle was to work using a free discharge through a drilled plug cock or another form of fixed orifice for condensate removal. However, as we mentioned earlier, this method wastes steam and proper trapping methods can affect a fair economy without reducing boiling time.

Water logging will occur if only one steam trap is used. Either the coil or the jacket will be affected due to the consequences of group trapping. The solution, drain the jacket and coil separately as shown in Fig. 41.

The jacket of course, must, be air vented as any ordinary kettle.

Steam for Heat Treatment

Heat treatment generally calls for the maintenance of a closely controlled temperature rather than the transfer of large quantities of heat. If using steam to heat the equipment, it is very important to keep the steam spaces free of condensate and air; otherwise, the required product temperature will be either slowly attained or not reached.

Presses

Steam presses used for rubber, bakelite and other plastic pressing are examples of this type of equipment. The steam spaces are usually in the form of cored or drilled passages in the platens of the press. The platens, which are the parts of the machine that contact the pressed material, are usually horizontal. Steam intakes are at one end while the condensate discharges from the opposite end of each platen. The platens usually are parallely connected by flexible hoses to the steam and condensate headers as shown in Fig. 42. The working steam pressure depends on the temperature required at the platen faces, and the rate of condensation depends mainly on the size of the press and the temperature of the product.

Small Presses

Because of the general design of presses, it is impossible to pitch the steam passage toward the condensate outlet. If steam does not pass through them continuously at a high velocity, there is little inducement for the condensate to flow from the platen. Consider this important characteristic when choosing a trap for a multi-platen press.
To induce the condensate to flow along the steam space in the platen, it is advisable to use a trap, which will release small quantities of condensate at frequent intervals. For this use, a thermodynamic trap is most useful. Bucket traps may be used, but they should be suitable for a pressure about twice as high as the working pressure so that the trap will discharge as frequently as possible to keep the condensate moving toward the outlet.

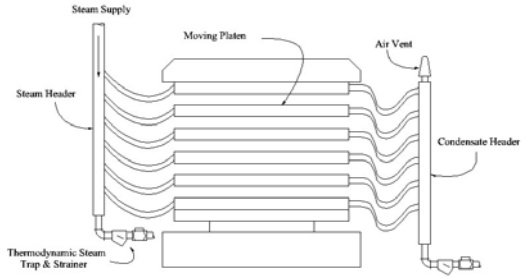

Fig. 42 Multi - Platen Press Parallel Connection

Whenever possible each platen drain point should have its own trap, since with this arrangement it will be possible to maintain more accurate platen temperatures. It is important to drain the main steam header.

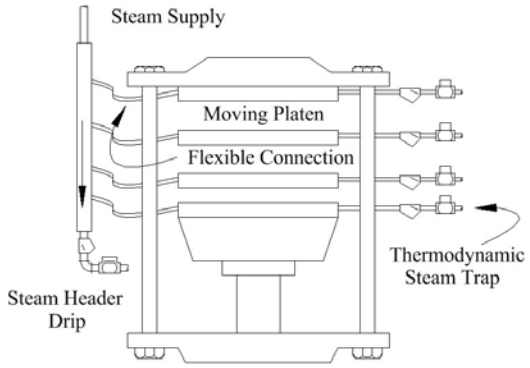

Fig. 43 Multi - Platen Press Trapping

If space limitations can make individual trapping impossible, then use the arrangement shown in Fig. 42. Both the steam and the condensate headers should be fitted with a thermodynamic steam trap. The condensate header in addition should have an air-vent installed at the highest point. If possible, there should be a downward slope from the steam header to the condensate header. It is not advisable to connect the platens in series since this would mean that all of the condensate from the top platen must flow through each of the succeeding platens. The bottom platens therefore would only see a mixture of steam and condensate and thus the heat transfer would be greatly affected.

Large Presses - such as those used for rubber and plywood

On presses with platens having an area of over twelve square feet, we definitely recommended individual trapping of the platens. There is usually a greater clearance between the platens and the condensate header than in the case with small presses so achieving this is not difficult. It is still important, however, to use the steam traps, which discharge small quantities of condensate at frequent intervals. Here again thermodynamic or possibly bucket traps are appropriate.

Drying Presses

In some industries, for example, fiberboard making, the presses first act as dryers, and then heat-treat the product under pressure. The boards travel between the platens releasing some moisture when the press closes under hydraulic pressure. At the same time, the heat of the platens evaporates water from the board.

Earlier in the course, we stressed the importance in a drying process which removes as much water as possible mechanically before removing the remaining water by the application of heat. This is particularly important in a drying press. Considerable improvement in the steam consumption and the output of fiberboard and similar presses are achieved by paying careful attention to the pressing of the board before drying by steam heat.

The starting load of these presses is heavy and the platens are large. The traps must be capable of handling the heavy starting load at the low starting pressure. If the starting pressure is high enough i.e. above 10 psi, the thermodynamic trap should be used. If the starting pressure is below 10 psi, use a float and thermostatic steam trap. There should be a continuous fall towards the trap to eliminate as much as possible the likelihood of steam locking.

Water Cooling of Presses

In some processes, cold water passes through the platens after the heating period either to cool the press quickly or to hold the product at a lower temperature as part of the curing process. Ordinarily, this water will pass through the steam trap and into the condensate return lines. This forced cooling of the press, along with any cooling water, which may remain in the platens, imposes an additional starting load on the steam traps at the beginning of the next heating cycle.

In some cases, the amount of cooling water used is more than is required for boiler make-up. If so, run the cooling water to drain rather than into the return system.

Chapter 7

Steam for Power

Although reciprocating piston-driven steam engines are not as common as they once were, there are still many in operation, the more frequently used devise is the steam turbine. For this reason, it may be instructive if we take a few pages to consider the use of steam for power generation and to examine some specific trapping arrangements for steam engines and turbines and associated equipment.

When using steam for power generation, we are interested only with the energy contained in the steam. Steam used for heating and most process work is useful only when it condenses and gives up its Latent Heat; using the lowest possible pressure for the application as seen in the section entitled "What steam pressure should be used?" On the other hand, condensation in steam engines and turbines is wasteful and often dangerous. Under ideal conditions, exhausting the steam from the equipment without condensing is preferred. For power generation we are interested in the fact that the steam is under pressure and will expand if given the opportunity; the fact that the steam also happens to be hot is really beside the point.

The steam cools as it travels through the engine or turbine. In a reciprocating engine, the walls of the cylinder are alternately heated, and cooled during each revolution, if steam contacts the cooler walls, it will condense. The steam also cools as it expands in the cylinder or turbine and, if expansion is great enough, some condensation will occur. To avoid this condensation process, superheat the steam. By introducing sufficient superheat, the steam will never cool to its saturation temperature during its passage through the machine and the possibility of slight superheated condition may occur when discharging condensate.

For reciprocating engines, there is some increase in efficiency as the amount of superheat is increased. However, the main justification for superheat is in the reduction of cylinder condensation. Ordinarily about 150 F. of superheat is sufficient for this purpose.

Steam turbines, on the other hand, require a high degree of superheat sometimes as much as 650 degrees. The efficiency of the turbine increases considerably as the steam is superheated.

The theoretical efficiency of both steam engines and turbines also increases considerably by raising the steam pressure. Some reciprocating engines run at steam pressures over 1000 psig, and turbine pressures can be as high as 3000 psig, although pressures under 1,000 psig are probably more common.

The factors affecting the choice of steam pressure and superheat for any given application are really beyond the scope of this course. A great deal depends on the design of the individual machine under consideration. We are concerned here mainly with removing water from the steam before it reaches the machine, and removing any condensate that may form in the engine and associated equipment.

For those of you who may be unfamiliar with steam-driven engines and turbines, we will outline briefly the various types of machines, which are in common use. However, we must assume that anyone using this equipment will be thoroughly familiar with its finer details, and will therefore concentrate mainly on correct trapping methods.

Reciprocating Steam Engines

In a reciprocating engine, the steam pressure acts on a piston, causing it to move from one end of a cylinder to the other. Some type of valving arrangement admits the steam to each side of the piston in turn, at the same time opening the other side of the piston to exhaust. In large engines, the steam partially expands in the high pressure or H.P. cylinder, and then passes to a low-pressure cylinder where the expansion is completed. Many engines have a high pressure, a medium pressure and one or more low-pressure cylinders. These “compound engines” are mainly in marine applications.

Probably the majority of the steam engines used today are of the “uniflow” type. This engine uncovers the exhaust ports by the piston as it nears the end of its stroke and introduces steam through poppet valves alternately to each end of the piston. The advantage with this type of engine is that the steam always flows in the same direction - from the ends of the cylinder toward the central exhaust ports, and the cooler exhaust steam does not pass over surfaces already heated by high-pressure live steam. There is thus no alternate heating and cooling of the cylinder walls. In the uniflow engine, there is no need for H.P., M.P., and L.P. cylinders, as one cylinder handles all the expansion.

Since the year, 1925 there have been more steam turbines in use than reciprocating steam engines. However, reciprocating engines are still used:

i. When it must be possible to reverse the direction or rotation and when controlling the speed over a wide range as in locomotives and rolling mill engines.

ii. When there is a wide variation in load, particularly for small machines operating at high initial steam pressures as direct drive reciprocating machinery, such as compressors and pumps.

Steam Turbines

The modern steam turbine is an extremely complicated and highly engineered piece of equipment. The operating principle, however, is very simple. Configurations of vanes or blades are around the circumference of a wheel that revolves inside the casing of the turbine. High-pressure steam travels through nozzles onto the vanes which revolves the wheel at high speeds. There are two broad groups of steam turbines:

i. Impulse turbines - steam expands against stationary blades or nozzles, and it is the impact or impulse of this steam on the rotation blades, which causes the rotation.

ii. Reaction turbines - the steam expands against both the stationary and the moving blades. The steam expands and its velocity increases as it passes between the moving blades. The reaction of the steam as it issues from the blades “kicks” the wheel around in the same way that a rifle kicks back when it is fired.

In practice, there can be as many as twenty or thirty bladed wheels connected to the same shaft. A stationary circle separates each moving wheel and directs the steam flow on to the next set of moving blades.

The expansion of the steam occurs in stages. This type has mounted wheels on the same shaft, one after the other along its length, but the turbine casing divides into separate chambers for each stage. Sometimes both impulse and reaction stages are included in the same turbines.

Steam turbines are essentially high-speed machines; they usually run at several thousand revolutions per minute. This unit can be close coupled to run high-speed a-c generators or other high-speed equipment, or through reduction gearing, low speed equipment.

Condensation in Engine Cylinders and Turbine Casings

As we mentioned earlier, condensation of steam takes place in engines and turbines due to radiation and absorption of heat by the metal. To reduce this source of heat loss to a minimum, insulation or steam jacketing of the engine or turbine is required. Condensation may also occur when the steam expands and gives up its energy. The heat loss through radiation causes condensate to form on the cylinder or turbine wall. The majority of condensate formed during expansion, however, remains in the body of the steam itself and leaves with the steam on the exhaust stroke.

Not all engines form condensate in the cylinder. In some cases, the cylinder wall is hotter at the end of the working stroke than the low-pressure steam. In such engines, the tendency is for the condensate to re-evaporate. In all engines and turbines, however, condensate forms when the engine is standing or warming up, and unless removed this water will damage the cylinder covers and piston or the turbine blades.

Engine cylinders are usually fitted with manual drain cocks. This method of draining is safe enough when warming up, but during running, the first indication of water in the cylinder is the knocking heard when water is present. It is for this reason that the majority of operators now fit an automatic steam trap in addition to the hand cock. Since Liquid expansion traps are unaffected by the rapid pressure variation in the cylinder they are suitable for cylinder drainage and have such a small internal volume that they do not greatly affect the clearance volume of the cylinder. As they are thermostatic, they are wide open when cold, so if the manual vales remain closed, the initial starting volume of condensate discharges through the steam trap.

Condensate forms in the steam because of the expansion process and discharges from the cylinder during the exhaust stroke. Single-expansion non-condensing engines exhaust steam and any condensate it may be carrying, to atmosphere. If the exhaust pipe rises vertically from the engine, condensate will collect at the bottom of the riser. Installing a thermostatic or thermodynamic steam trap will overcome the problem.

In multiple expansion and condensing engines, however, the exhaust steam from the high-pressure cylinder passes into the casing or connecting pipe to the medium or low-pressure cylinder. The steam velocity and direction of flow changes rapidly in the connecting pipe and this causes condensate to separate from the steam.

By properly trapping this condensate, the steam will be drier and more efficient when entering the next cylinder. There is usually not enough room to fit an adequate collecting leg in the connecting pipe between the cylinders. The drain tapping connection should be as large as possible and at the lowest point possible. If your choice is a mechanical steam trap, install a blow-down cock in the bottom of the trap for blow down to eliminate any accumulation of oil.

When multiple-expansion and condensing engines are working on light load, the casing between the medium and low-pressure cylinders may be under vacuum. Under these conditions the trap, if exhausting to atmosphere, could not release its condensate. It is advisable therefore to connect the outlet from the trap to the condenser inlet if this condition is likely. There will then always be a positive pressure difference between the inlet and outlet of the trap.

Besides improving the overall efficiency of the engine, keeping the steam as dry as possible in the cylinders reduces steam leakage caused by wear on gland packing as well as improving cylinder lubrication. Condensate washes the film of oil off the cylinder surfaces, dilutes, and emulsifies the oil. It also washes the grease and graphite out of gland packing materials, causing them to harden.

Intermittent engines such as crane engines, steam hammers, etc. may stand for long periods with steam in the cylinders, simply keeping the engine warm and ready for use. The steam is continuously condensing; take particular care in keeping the cylinders free of water by efficient trapping. Insulating or steam jacketing the exposed parts of the engine can reduce the rate of condensation.

Steam Turbine Drainage

Turbines provided with drain connections in the casing, are more efficient when using automatic steam traps, rather than the manual drain cocks. Traps will release the warming-up lead of condensate and will prevent any accumulation of water during the running period. Remember, however, that the condensate formed during the expansion of, and because of, the work done by the steam, travels in the steam itself at high velocity through each stage. Between stages in the casing the steam velocity is reduced; it is here that condensate will tend to separate. This, then, is the place to drain the turbine.

The load on the machine determines the pressure and temperature of the steam in each stage of the turbine. If there are wide load variations, such as may occur in the generation of power by turbo-generators, the drain traps must be capable of handling the varying pressure conditions. Temperature and pressure levels will probably dictate the use of a bucket trap or thermodynamic trap in the high pressure and intermediate stages.
The vacuum stages are important because it is there that condensate will collect in the greatest quantities. For draining these vacuum stages, use a bucket trap with its outlet connected to the condenser. The foregoing notes are general recommendations; consider each case carefully as each installation is unique onto itself.

Condensation in Steam Supply Mains

It is very important that mains supplying steam to power generating equipment be kept free of condensate so the steam will reach the equipment in as dry a condition as possible. This section we will cover only the dripping of the branch main before it enters the engine or turbine, we will cover the steam main trapping later in the course.

Supply Mains to Reciprocating Engines

When introducing steam through the automatic inlet valves to the high-pressure cylinder of a reciprocating engine, the steam velocity in the branch main is continually changing, causing a variation in main steam pressure. If the engine is running at low speed, there is a regular rise and fall of the pressure in time with the engine. If the engine is running at high speed, the pressure variation may be so rapid as to appear almost like a vibration in the main. This pressure fluctuation will destroy any pressure gauge that does not use a snubber.

Overcoming the effect of this pressure variation requires a trap with ample operating power that the internals of the trap will not tend to vibrate and bounce on its seat when operating. A poor choice is a balanced pressure thermostatic trap as they tend to react to the average temperature of the steam between the highest and lowest pressure variation. This results in a floating action, causing the trap to discharge in time with the engine. This rapid action also tends to shorten the life of the trap.

If the pressure pulsations were not sufficient to cause vibrations of the trap, a bucket trap would be suitable choice. The ideal situation is to eliminate most of the pulsations by installing a metal flex connector between the engine and the inlet of the steam trap and use a thermodynamic steam trap that has only one moving part.

Valve Chests

The pressure conditions in the valve chests of reciprocating engines are similar to those in the branch supply main and the same comments apply.
Condensation occurs in the valve chest just as it does in the main, and a suitable trap connected to the lowest part of the chest will keep it clear of condensate when staring up and during running.

Supply Mains to Steam Turbines

The steam flow in a turbine is continuously regulated by the speed governor according to the load on the engine; there is no intermittent opening and closing of valves. Therefore, steam traps draining the steam supply to a turbine need not contend with pressure pulsation or vibrations (unless it is a marine application) and can make use of mechanical steam traps. Superheated steam and high pressures require special materials not only in the traps but also in the strainers and valving. The use of the thermodynamic steam trap is an excellent choice under these conditions.

The high velocity of the steam as it passes across the blades of the turbine can cause rapid erosion if the steam is carrying drops of condensate. For this reason, the steam should be kept as dry as possible, not only before admission but during expansion in the turbine. If the steam carries impurities, erosion will increase and corrosion could occur. Install a 100 or 200 mesh strainer in the steam supply line just before the turbine to prevent solid impurities from entering the casing; and clean or replace the screen at regular intervals.

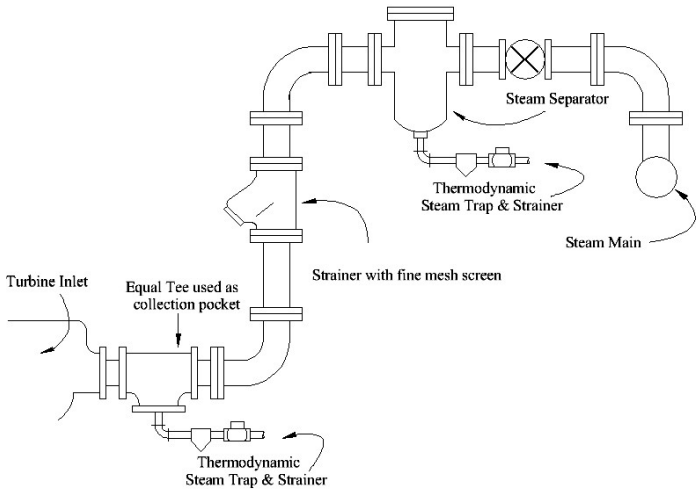

Fig. 44 Turbine Inlet & Steam Separator

Steam Distribution

Under this heading, we will consider ways of installing steam traps on steam distribution piping. This constitutes an extremely important use of steam traps; this subject never receives the emphasis it deserves.

Steam Main Drainage

Although we briefly covered this subject earlier in this course, we feel that it is of sufficient importance to go into it in further detail at this time.

One of the more common uses of steam traps is the dripping of steam mains. It is different from most trap applications in that efficiency is not the prime consideration; safety comes first as water, which is not removed from steam mains will cause water hammer.

Water Hammer

The danger of an un-drained or improperly drained steam main lies in the possibility of water hammer. This “water hammer” is the impact resulting when a rapidly moving slug of water stops suddenly. Water, if allowed to collect in the bottom of a steam main, will gradually accumulate. The fast-flowing steam causes ripples on the surface of the water and eventually the ripples become large enough to form a slug of condensate in the steam main. The steam then pushes this slug of water along the main traveling of speeds of 60, 70 miles per hour or more until it hits a restriction. When the slug reaches an obstruction such as a reducing valve, steam trap, or elbow in the main, the slug of water suddenly stops, usually with disastrous results to the equipment.

Equipment subjected to water hammer has recorded pressures as high as several hundred thousand psi. These extremely high pressures exist for only a few microseconds and therefore will not show on an ordinary pressure gauge.

Property damage from the result of water hammer is seriously enough. However, sometimes injury and loss of life occur from a situation which can be prevented by using the correct methods to eliminate condensate from steam mains.

Properly drained mains and using the proper start up procedures not only prevent water hammer damage and corrosion but also improve steam quality and reduce maintenance of steam fittings.

Liberal safety factors and oversized steam traps do not necessarily provide an efficient draining installation. Consider these two important factors in DESIGNING a main drip:

a. Any steam trap can discharge the condensate brought into it ONLY if the pressure in the trap is greater on the inlet than on the outlet side.

b. Any steam trap can discharge only condensate that enters the trap.

The heaviest condensate load in a steam main occurs during warming up. There may be heavier loads from boiler priming or foaming, but this is not strictly condensate, which we will discuss later.

Table 10 shows the amount of steam required to warm up 100 feet of various sized mains from 50° F. to working pressures from 0 psi to 250 psi.

Table 9 Start Up Loads

Working Pressure PSI	Main Sizes								0'F Correction Factor
	2"	2-1/2"	3"	4"	6"	8"	10"	12"	
0	7.7	12.2	16.0	22.7	40	60	86	105	1.31
5	8.6	13.6	17.8	25.3	45	67	95	116	1.28
10	9.2	14.6	19.1	27.2	48	72	102	125	1.26
20	10.3	16.3	21.3	30.4	53	80	114	140	1.24
40	11.9	18.9	24.7	35.2	62	93	132	162	1.21
60	13.2	20.9	27.3	38.9	68	103	146	179	1.19
80	14.2	22.5	29.5	42.0	74	111	157	193	1.18
100	15.1	23.9	31.4	44.7	79	118	168	205	1.17
125	16.1	25.6	33.5	47.7	84	126	179	219	1.16
150	17.1	27.0	35.4	50.4	89	133	189	222	1.16
175	17.9	28.3	37.0	52.9	93	140	198	243	1.15
200	18.6	30.0	38.6	55.0	97	146	207	253	1.15
250	20.2	31.7	41.5	59.1	104	156	222	272	1.14

- For outdoor starting temperatures of 0°'F, multiply the values given for each main size by the correction factor corresponding to the working pressure.

These figures were calculated based on the following formula:

$$\text{Warm-up steam condensed lb.} = \frac{W \times L \times 0.115 \times (T2 - T1) \times 1.1}{H}$$

Where: W = weight of main (lb/ft) L = length of main in feet
0.115 = specific heat of steel T2 = steam temperature
T1 = starting temperature
H = latent heat of steam at working pressure BTU
1.1 = factor to allow for wetness of steam and fittings on main

Once raising the main to its working pressure, further condensation will result from radiation losses and separation of moisture from wet steam. Both of these sources of condensation will result in less than the warm-up load, so that a trapping installation that is adequate for warm-up will handle the running load without difficulty. The most significant figures in Table 10 are those showing the amount of steam condensed in raising the temperature of the main to 212° F. That is, 0 psig.

Example: In raising the temperature of 100 feet of 10 inch main from 50° F. to a working pressure of 100 psi, 168 lb. of steam is condensed. 86 lbs is condensed in raising the temperature to 212° F (0 psi).

The interesting point here is that no steam trap, however large, can discharge the initial 86 lb. of condensate because until the pressure in the main reaches at least 0 psig, no pressure difference exists to force the condensate through the trap!

Collecting Legs

Obviously, it is necessary to install a collection leg or reservoir if the steam trap on the main is to be effective and the installation safe. Fortunately, the steam main also retains some of the condensate as it forms on the wall of the pipe and flows toward the drainage point. The steam temperature is higher than the pipe temperature at any given time, resulting in some gauge pressure in the main by the time the main temperature rises to 212° F. For perfect safety, the collecting leg should theoretically have a capacity of not less than the volume of condensate formed when raising the temperature of the main to 212° F. For mains 4" and over, however, allowing for the unavoidable delay in the condensate droplets reaching the draining point and the temperature lag of the main, collecting legs with a capacity of one-half the volume of the condensate formed in raising the main to 212° F. are adequate for horizontal mains.

For vertical main risers, the condensate flows to the drain point. Generally, however, vertical mains are not long, and a leg of equal or greater capacity than the initial volume is not practical.

Table 11 Collecting Legs

MAIN SIZE	2"	2-1/2"	3"	4"	6"	8"	10"	12"
LENGTH OF LEG	15"	18"	15"	24"	18"	18"	18"	18"

Recommended Minimum Length of Collecting Leg per 100 feet of Horizontal Main to Hold Initial Load on Warm-up 50° F to 212° F.

- For outdoor starting temperatures of 0° F, increase length of leg by 30% for vertical mains, double figures given for length of horizontal leg.

Table 11 gives the recommended minimum length of collecting legs per 100 feet of schedule 40 pipe.

The recommended leg sizes for mains 4” and above have a capacity of one-half of the initial warm-up load, while mains 4”, and smaller hold one-quarter of the initial load. In smaller mains, the weight of steam in the mains at 0 psi is low, and it is impossible to keep the pressure from rising above 0 psig. For example, 100 ft. of 3” pipe at 0 psig contains only 0.2 lb. of steam. However, collecting legs are just as important on small as on large mains since the former are more frequently used to feed process and heating equipment.

Inadequate draining of small mains and feeders is a common cause of damaged controllers, steam traps and of leaking joints. The collecting leg assures that condensate enters the trap; it provides a reservoir for condensate, while the inlet pressure at the trap rises sufficiently for the trap to discharge.

Steam Trap Selection

It is important to remove condensate from mains as quickly as it forms; traps, which release condensate at steam temperature, are preferred. These types are, float and thermostatic, thermodynamic, and inverted bucket traps. The float and thermostatic and thermodynamic steam trap are the two preferred choices; the thermodynamic for higher-pressure mains and the float and thermostatic for low-pressure mains.

The collecting leg will provide for the period when the trap has no discharge capacity because of the low pressure in the main. The trap selected must then handle the condensate as quickly as it continues to form. The maximum condensing rate occurs as the metal warms to 212° F. After this point, the temperature difference between the steam and the metal decreases and lowers the condensing rate. Halfway through the warm-up period the condensing rate falls to about one-half the average.
A steam trap with a capacity equal to the average rate of condensation at about one-half the final pressure has ample capacity to handle the load even with a reduced warm-up time. So long as an adequate collection leg is installed to handle the initial load, this in effect gives a safety factor of two to one to allow for hurried warm-up.
CAUTION - because warm-up time is a function of the operator and not of the trap, “safety factor” is precisely what the name implies. Any safety factor, no matter how large, becomes pointless by a careless operation. Careful warming up of mains is essential, not only because of the water hammer hazard, but also to limit stresses caused by unequal expansion as the main warms up and to reduce erosion by high velocity steam and condensate.

To clarify the situation, we will look at a specific example:

We wish to select a trap to drain 75 feet of 8" schedule 40 steam main with a working pressure of 150 psi and warm-up time of 5 minutes.

1. From table 11, select a collecting leg size for 100 feet. A leg 8" in diameter and 18" long is required. For 75 feet, an 8" x 14" leg should be used. (i.e. .75 or $\frac{75}{100}$ x 18 = 13.5, or roughly 14").
2. Determine the average condensation rate. From table 8, total warm-up load is 133 lb. and:

$$\text{Average load} = \frac{133 \times 60 \text{ minutes}}{5 \text{ minutes}} = 1595 \text{ LB/hr for 100 feet of main}$$

$$\text{For 75 feet: average load} = \frac{75}{100} \times 1595 = 1196 \text{ LB/hr.}$$

This is twice the load expected half way through the warm-up, and therefore includes a safety factor of 2:1 to allow for an impatient operator.

3. Correct this figure to account for the steam trap operating load factor according to the type of trap chosen. The operating load factor is explained later in the course.

4. From the manufacturer's catalogue, select a trap having: body and valve seat rating not less than 150 psi; capacity at half the working pressure (i.e. 75 psi) not less than the capacity called for in (3) above.

Installation

The two most important parts of a steam main trapping installation are the collecting leg and the correct steam trap. Each is useless without the other. However, proper trap installation is also important. A typical single-trap installation incorporates these simple rules.

1. Install the trap close to the collecting leg. Long horizontal pipe runs before the trap can cause steam locking.

2. If possible, avoid lifting condensate or piping condensate to a return line under appreciable backpressure. When backpressure on the trap is unavoidable, use a collecting leg large enough to hold the initial condensate until the pressure in the main is high enough to overcome the backpressure, and use a trap with enough capacity to discharge against the backpressure.

For proper sizing, select from the manufactures catalog the capacity at the pressure difference between half the working pressure and the backpressure. For example, if we have a main pressure 100 psi and a backpressure of 20 psi, half of the working pressure is 50 psi and the difference between this and the backpressure is 30 psi. The trap chosen must therefore be able to pass the average condensate load at a pressure differential of 30 psi.

3. Install a strainer with a blow down valve before the steam trap.

4. Use pipe connections to and from the trap at least equal to the size of the trap connections, and preferable one size larger.

5. Install drip trap at all low points of the mains.

Parallel Trapping

Traps sized to handle the warm-up load of a steam main are over-sized for the radiation loss or running load. This over sizing can create problems. For example, inverted bucket traps tend to lose their prime and pass steam when greatly oversized. All traps with the possible exception of the float and thermostatic wear quicker on light rather than on heavy loads and the frequent release of small quantities at the full discharge rate of a trap often creates undesirable return line conditions. To reduce this problem install 2 smaller steam traps in parallel that have the same total capacity as shown Figs. 45 and 46. We recommended utilizing parallel trapping in all situations in which a single ¾" trap will not have sufficient capacity.

Note the piping economies inherent in a parallel trapping hook-up; if one trap is being maintained we have an automatic by-pass since one trap can handle the total load. You will also appreciate the insurance value of parallel trapping; it provides emergency protection in the event of a malfunctioning steam trap. This trapping method is especially important in automated plants.

Priming Load

Priming of boilers can cause sudden overloads on steam traps near the boiler, which are impossible to estimate in advance. Ample collection legs are a vital necessity of such installations, along with parallel trapping with both traps suitable for the maximum working pressure.

Air Venting

2. Air in steam mains can delay warm-up, especially of low-pressure mains. Traps for mains should be capable of releasing air that reaches them; otherwise their capacity will be seriously impaired. Auxiliary air vents on the ends of mains will help decrease warm-up time and avoid unnecessary feeding of air into process heating surfaces. Fig. 47 shows a typical air vent installation.

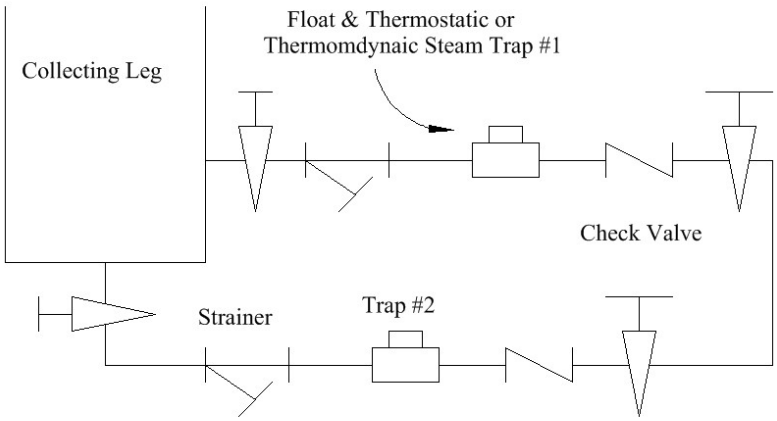

Trap #1 has 2/3 and trap #2 1/3 of the required total capacity.
When the warm - up load is removed, trap #1 closes and
trap #2 handles the running load

Fig. 45 Parallel Trapping of Main Drip

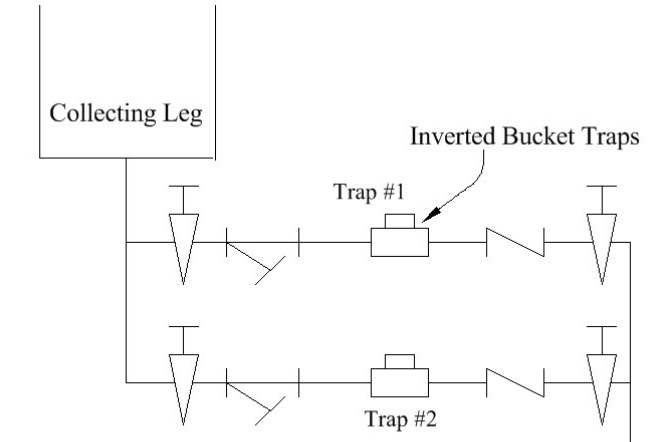

Trap #1 has 1/3 rerquired total capacity and a valve seat suitable for the maximum pressure. Trap 32 has 3/4 total required capacity and is equipped with a valve seat suitable for 30% lower than maximum pressure so that trap #2 does not operate when main reaches working pressure.

Fig. 46 Parallel Trapping of Main Drip

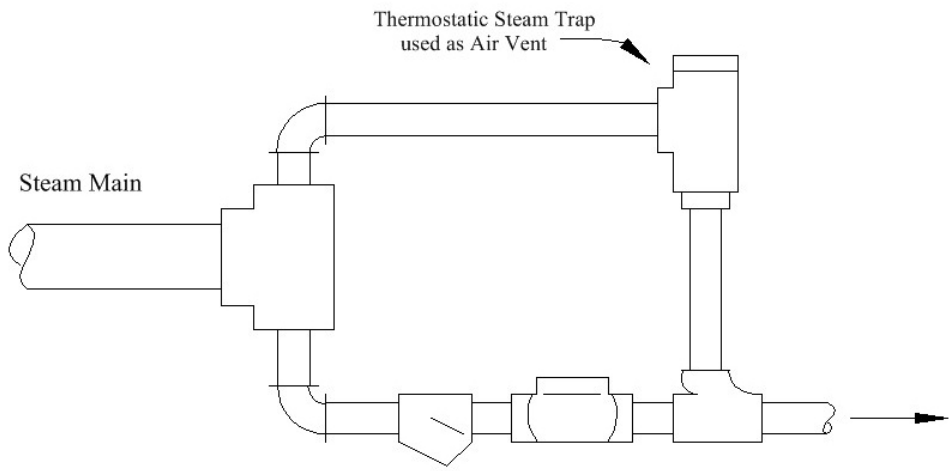

Fig. 47 Draining & Air Venting Terminal End of Main

Safety Factors

A safety factor represents an over sizing of the steam trap which will compensate for excess starting loads and other uncertainties. For instance, if a stem trap having a capacity of 1200 pounds of condensate per hour is used on a piece of equipment which condenses 400 pounds of steam per hour, the trap is said to have a safety factor of 3:1.

There seems to be a great deal of confusion regarding the proper use of safety factors, they have ranged from 1:1 to 20. Too large a safety factor is needlessly expensive and may cause the trap to malfunction. Too low a safety factor can interfere with the correct operation of the equipment. The use of the correct safety factor is an extremely important aspect of intelligent steam trap selection and we will consider this problem in some detail.

The safety factor, as it applies to steam trap selection, actually consists of two parts:

1. A factor will allow for any idiosyncrasies in the particular trap selected.

2. A factor will allow for varying operating conditions in the steam equipment.

Let us try to evaluate the two safety factors so not to lead to incorrect conclusions. Therefore, let us consider first the way in which the operating characteristics of certain trap types affect the discharge capacity.

Each steam trap manufacturer includes in his catalogue charts giving the discharge capacity of their steam traps which are compiled from test results.

When a manufacturer tests their steam traps, they test them to their controlled conditions or standards. The manufacturer is free to select the inlet and outlet pressures, the temperature, and amount of condensate supplied to the traps.

However, when the trap is in service, the inlet and outlet pressures, the condensate temperature and volumes do not comply with the conditions when tested. The discharge of the trap in actual operation will not consequently agree exactly with the figures given in the manufacturer's catalogue.

As we read earlier, the pressure differential across the trap and the temperature of the condensate influences the capacity of any trap. Since the trap will pass considerably more cold water than hot condensate, the user must be sure that the capacity figures given in the catalogue are for hot condensate or slightly below steam temperature and not cold-water capacities. Although very few manufacturers' now give cold-water capacities, we still encounter this misleading practice.

When testing a steam trap for capacity, one must ensure that there is a constant supply of condensate at the trap inlet so that the trap can discharge continuously during the test period. If testing a bucket trap, the trap will remain open and discharge continuously; steam will not reach the trap and the trap will therefore not close during the entire test. In addition, there will be a constant inlet pressure at the trap. Now consider the same trap installed in service. The trap will, open and close intermittently. When the trap opens it, releases condensate at its maximum rate, and the length of time it remains open depends on the quantity of condensate. The trap will close when all of the available condensate discharges and steam reaches the trap.

The following point is very important. The duration of the closed cycle remains roughly the same regardless of the condensate load. In other words, no matter how much condensate backs up behind the trap, the trap will remain closed for approximately the same length of time. This is because in an intermittent discharge type of trap the length of time the trap remains closed depends, not on the rate of condensation, but on how long the trap takes to "trigger" the valve opening mechanism. In a bucket trap, the delay in triggering is the time taken for the steam that fills the bucket when the trap closes to leak through the bucket vent or condense. In a thermostatic trap, the delay depends on the length of time required to cool the hot condensate that has entered the trap and cause the thermostatic element to open the valve. In a thermodynamic trap, the delay depends on the length of time required for the steam in the "control chamber" to condense.

As we mentioned before, the catalogue rating for a trap gives the discharge capacity under continuous discharge conditions. However, as we have just seen, when the trap is actually in service it is closed for at least part of the time and only when the trap is open is it discharging condensate at the rate given in the catalogue.

Now consider this point, when a trap discharges, there is a pressure drop in the supply line prior to the trap. The manufacturer tests a trap using a continuous discharge, which has a constant pressure. Fig. 48 illustrates this condition.

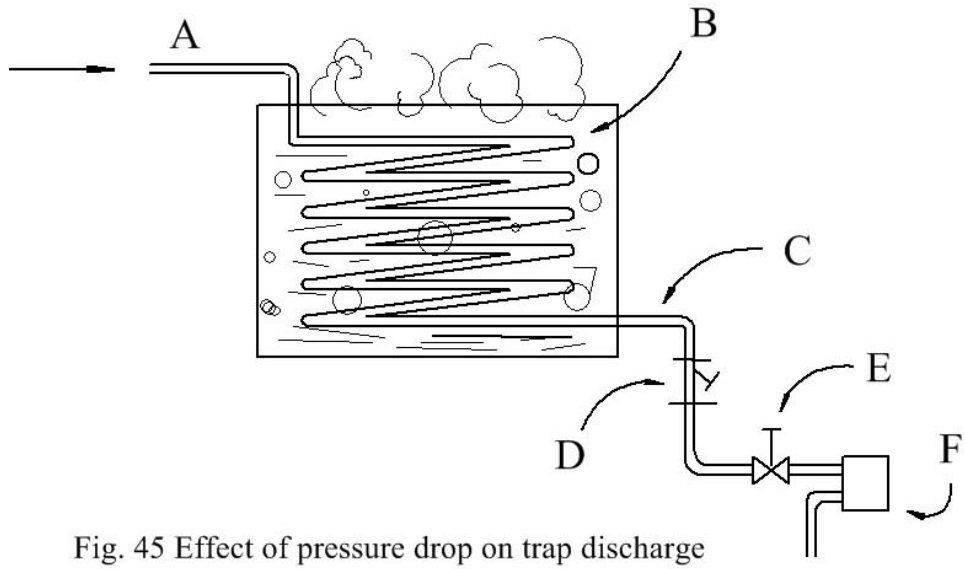

Fig. 45 Effect of pressure drop on trap discharge

Steam travels along pipe “A” to the heating coil surface “B” where it condenses. Condensate flows through the coil, along the pipe marked “C”, through the strainer “D”, the isolation valve “E” and then to the steam trap marked “F”. When the trap is closed, the pressure at the inlet “F” is the pressure at “A” minus the pressure loss in the heating surface “B”. Immediately the trap opens, condensate flows through the fittings “C”, “D” and “E”. It can flow only because of the pressure drop through the fittings. The greater the trap capacity, the greater the flow and the greater the pressure drop. This pressure drop in the piping means a lower pressure at the trap inlet, and this decreased pressure automatically reduces the discharge capacity of the steam trap. This condition is aggravated by the flashing of condensate in the inlet piping caused by the pressure drop. The flash steam entering the trap causes it to close partially, reducing the capacity further still.

We must also remember that under test, the trap usually discharges to an atmosphere condition, which means the trap does not see any backpressure. In service, however the backpressure on the trap can be considerable and can seriously affect the discharge capacity, particularly if the return main is undersized. Please note in the above discussion that even though the trap under actual operating conditions may appear to have less capacity than given in the manufacturer's data, the trap actually is performing according to specification; the difference is in the conditions under which the trap is operating.

So far, we have considered the steam traps as handling only condensate and steam. In practice, there is a need to remove air and other noncondensable gases both on start up and during the operation of the equipment. Traps differ greatly in their ability to discharge air, so take this into consideration when applying a safety factor.

We will now consider the various types of traps, deciding for each type what safety factor we should apply. Remember, this safety factor, account for the operating characteristics of each individual type of trap. We have not yet considered specific safety factors to allow for the operating conditions of the equipment.

Thermostatic Steam Traps

Thermostatic traps operate on the difference in temperature between steam and condensate. These traps cannot, of course, discharge condensate at steam temperature - the condensate must cool at least slightly before the trap will open. The balanced pressure thermostatic trap is wide open when cold and will discharge air freely until the equipment is up to temperature, in fact, the balanced pressure steam trap when cold has the greatest air venting capacity of any type of steam trap. Therefore, there is no need to make allowances to correct for possible air binding. Condensate also flows freely through the trap on start-up, but once steam reaches the trap, cycling begins, resulting in an open and shut action.

Once the trap closes, the time it remains closed depends on the rate of heat loss from the trap body, not on the rate at which condensate forms at the trap inlet. The rate of heat loss from the body depends on the surrounding air temperature and on the conductivity of the connecting pipe from the steam space. This conductivity, by the way, is one reason for the recommendation of installing the thermostatic steam trap two to three feet below the steam space.

It follows that the cooler the surrounding air, the shorter will be the closed period of the cycle. When the installation is such that the trap is in a cool exposed position, a load factor of 3:1 will allow for capacity loss due to the operation of the trap. However, if the trap is in a hot sheltered position, the heat will not radiate quickly and then increase the load factor to as high as 6:1.

Do not insulate Thermostatic traps for reasons that are now obvious and do not install them inside dryers and other equipment, which would retard heat loss from the body.

Liquid Expansion Thermostatic Traps

This type of steam trap has a liquid-filled thermostatic bellows. Since it is thermostatic, the trap is wide open when cold and initial air venting calls for no load factor correction. On start-up, the trap also discharges at its maximum rate. However, when condensate reaches the preset temperature of the thermostat, the condensate discharge will throttle.
The condensate temperature varies inversely as the load on the equipment i.e. the condensate temperature rises with load decrease and falls with load increase.

The thermostat picks up this temperature change, which alters the valve opening to suit the change in conditions.

However, the movement of the valve is relatively slow and if the condensate load varies, use a safety factor of at least 2:1. If it is necessary to install the trap in a hot location, increase the safety factor to 4:1. When the load is steady, however, no safety factor is necessary.

The operating characteristics of bi-metallic thermostatic traps are the same as for the liquid expansion trap, although the traps themselves are very dissimilar. For varying loads, use a safety factor of 2:1. On steady loads, no safety is necessary.

Float-Thermostatic Traps

This type of trap has a float-operated valve for discharging condensate and a separate thermostatic element for discharging air. Since this trap closes only when no condensate is present and opens immediately when condensate entering the trap rises sufficiently in the body to open the valve, no load factor need be applied to correct for the closed period.

In addition, since the trap has a separate air vent, there is no need to allow for the presence of air and other non-condensable gases. However, during running the air entering the trap must cool before the vent can open, so apply a factor of 1.2:1 to allow for this slight delay in air venting.

Inverted Bucket Traps

We might mention here that the nomenclature of steam traps is occasionally somewhat vague. It has recently become the habit to refer to a certain type of inverted bucket trap as an “open float-thermostatic” type.

This terminology can be misleading since the trap is simply an inverted bucket trap with a bi-metallic thermostatic air vent. Its characteristic trap described above, and the load factor correction for the “open float-thermostatic” trap is the same as for the inverted bucket trap.

As we learned earlier, about the basic operating principle of the bucket trap, it is obvious that air or other non-condensable gases entering the bucket will act in the same manner as steam, causing the bucket to float and close the valve. The bucket vent is most important. If it is too large, the bucket will not float; if too small, it will prolong the closed period. If we have a clogged vent, the trap will not work at all. Once it is closed, the trap must remain closed until the steam or air has leaked through the bucket vent.

This leakage is, of course, independent of the rate at which condensate is forming upstream of the trap. A load factor of 2:1 will usually allow for the uncontrolled closed period of the cycle.

However, when handling larger volumes of air, the load factor could rise to 4:1 to allow for the obstruction caused by the partial air binding. To eliminate air binding on start-up, when it is necessary to eliminate a large quantity of air quickly, use a bi-metallic air went either on the bucket or on the cover of the trap. However, the bi-metal vent will release air only on start-up.

Air binding can occur during running because the temperature of the air-steam mixture is too high for the vent to open. Balanced pressure air vents on the trap cover will also release initial air and, if installed to bypass the main valve, will vent the trap during operation.

Thermodynamic Traps

Initial condensate and air raise the disk, allowing free discharge until air at steam temperature reaches the trap. At this point, the velocity of the flashing condensate reduces the pressure under the disk and recovery of the velocity pressure as the fluid strikes the wall of the control chamber above the disk, builds up pressure over the disk, snapping it shut. The trap will remain closed until the pressure in the control chamber, which holds the trap shut, reduces by the condensing of the trapped steam. When the downward force resulting from the control chamber pressure falls below the upward force caused by the inlet steam pressure, the disk lifts and condensate discharges at steam temperature.

The heat conducted from the inlet piping considerably affects length of time required for the pressure to drop in the control chamber. As soon as condensate collects at the trap inlet, the heat input to the control chamber reduces and the chamber pressure drops rapidly, opening the trap. Air that enters the trap mixed with steam does not interfere with the cycling of the trap because the steam portion of the mixture condenses quickly.

The operation of the trap is, however, intermittent so we recommend an operating load factor of 1.25:1.

We must stress again that the load factors discussed above are not overall safety factors to cover all operating conditions, but are simply factors recommended to take care of the inevitable reduction in steam trap capacity caused by the closed part of the cycle.

We must modify this factor to take into account the conditions under which the trap actually will operate. This modification is an allowance for:

i. margin of error in estimating the actual condensate load and temperature.
ii. uncertainty concerning exact inlet and outlet pressures that is, differential pressure across the trap.
iii. starting load of the equipment.
iv. uncertainty regarding the quality of the steam entering the equipment.

This additional factor can vary from 1.0 (i.e. no factor at all) where you know precisely the operating conditions to a wild astronomic guess, depending on the accuracy of the data available. Note that there is a great deal of difference between applying a carefully considered load factor, and guessing at a condensate load. The steam trap user should make every effort to determine the actual load on the trap as closely as possible. Then, taking into account the factors we have mentioned above, he should apply an intelligent safety factor.

Flash Steam

Earlier, we examined how to utilize flash steam to supply equipment running at a lower pressure. Sometimes, however, we cannot utilize the flash steam and it's regarded as a nuisance and something to be eliminated as conveniently as possible.

Let us take as an example a plant using high-pressure steam for both process work and heating. The ideal situation, of course, would be to use high-pressure steam for the process machines and use a combination of low-pressure steam and flash steam for heating. We will assume for the moment, however, that this is not practical. High-pressure condensate, is returning to the condensate receiver and then pumped into the boiler. As we have learned, flash steam forms whenever condensate passes from a higher to a lower pressure (if the temperature of the condensate at the higher pressure is greater than the boiling point of water at the lower pressure).

Depending on two factors, return main sizing, and or insulated or non-insulated returns, flash steam, which forms at the trap outlet, may condense before the condensate reaches the receiving tank. On the other hand, if the return mains are undersized and/or heavily insulated, the flash steam formed at the trap outlet could carry to the condensate receiver before it condenses.
In some cases, indeed, the return lines may be so undersized that there is a further reduction in pressure as the condensate enters the receiver, resulting in the generation of more flash steam at this point.

If you are unable to use this flash steam in a low-pressure system, this flash will discharge through a vent pipe to waste. Although the discharge of flash to atmosphere is wasteful and represents a net loss, we must remember we are not wasting live steam.

In our experience, engineers sometimes spend days searching for faulty steam traps when they see what they think is live steam issuing from the receiver vent, only to discover that the traps are working perfectly and the "live" steam is really flash. There is unfortunately no certain way to distinguish flash from live steam; we can only rely on experience in estimating the amount of flash, in a given installation.

Flashing to atmospheric pressure in the receiving tank will reduce the temperature of the condensate to at least 212º F. Since water cannot exist at a higher temperature at atmospheric pressure, if the receiver is insulated, it is possible that the condensate could enter the boiler feed pump at a temperature high enough to cause the pump to cavitate. If the condensate is to be thrown away, there could also be a problem because most municipalities insist that water be cooled to about 130º F. before it is dumped into the sewers.

It sometimes happens then, that the condensate does not sufficiently cool by flashing and it becomes necessary to supply additional cooling before it enters either the pump or the sewer. To accomplish this, spray some of the cold make-up water directly into the tank by installing a temperature regulator in the cold water line with its sensing element immersed in the condensate.

Use this system when it is impossible to vent the flash steam to atmosphere or when the amount of flash generated is objectionable and since the cold water injected into the tank will eventually reach the boiler, the water should first be treated.

Please remember the above topic was if the flash steam was unwanted and we were trying to eliminate it as painlessly as possible.

However, as we mentioned earlier, a much better plan is to utilize the flash in some lower pressure equipment. In this case, insulate the entire return system in order to conserve as much heat as possible.

The utilization of flash steam was pretty well covered. One thing not discussed previously was the sizing of the flash tank. There are ready made flash tanks available in the market, but are usually constructed on the job by the contractor. The actual dimensions of the tank are not critical so long as it is large enough to avoid carry-over of moisture in the flash steam.

A method of sizing flash tanks is in the table below. This table gives the area in square feet (i.e. diameter x length) at the center of a horizontal cylindrical flash tank for every 1000 pounds/hour of condensate being discharged into the tank. If the quantity of condensate differs from 1000 pounds/hour, alter the figures in the table proportionately.

Table 10 Flash Tank Sizing

Area in square feet = diameter x length at centre of horizontal cylindrical flash tank for 1000 lbs of condensate per hour being discharged from higher to lower pressure as given below

Initial pressure PSIG	Final Pressure PSIG									
	40	30	20	15	10	5	2	ATM	5"Hg	8" Hg
160	.580	.810	1.190	1.47	1.93	2.58	3.22	3.80	4.90	5.65
150	.540	.760	1.160	1.41	1.85	2.53	3.11	3.705	4.75	5.50
140	.510	.720	1.075	1.34	1.78	2.39	3.00	3.57	4.60	5.30
130	.470	.670	0.990	1.27	1.70	2.24	2.898	3.435	4.45	5.20
120	.435	.625	0.960	1.21	1.62	2.19	2.79	3.30	4.3	5.05
110	.395	.602	0.900	1.14	1.52	2.08	2.65	3.15	4.11	4.82
100	.356	.580	0.840	1.08	1.42	1.97	2.52	3.00	3.92	4.60
90	.305	.500	0.770	0.99	1.33	1.84	2.36	2.84	3.71	4.36
80	.254	.420	0.690	0.91	1.23	1.70	2.20	2.68	3.50	4.12
70	.190	.345	0.595	.795	1.09	1.54	2.01	2.45	3.23	3.825
60	.140	.265	0.500	.680	.955	1.385	1.815	2.225	2.96	3.52
50	.080	.185	0.405	.565	.540	1.23	1.62	2.00	2.69	3.24
40	-	.110	0.310	.450	.680	1.07	1.43	1.77	2.42	2.93
30	-	.090	0.240	.270	.480	.870	1.13	1.34	2.01	2.46
20	-	.060	0.160	.080	.280	.680	.840	.910	1.60	2.00
12	-	-	-	-	-	2.96	.660	.750	1.17	1.51
10	-	-	-	-	-	.220	.570	.650	1.05	1.40

From the table, we find that 1000 lb./hr. of condensate from 50 psi to 5 psi will require an area of 1.23 square feet. Since we have 14,000 lb./hr., we will require an area of 14 x 1.23 = 17.22 sq. ft.

Produce a vessel of 3 feet in diameter by 6 feet long, giving an area at the center of 18 sq. ft.

We have tried to make this Advanced Course as comprehensive as possible. However, we realize that we cannot hope to cover all problems encountered in the field. We, therefore, repeat the invitation extended at the end of the first Course: if you have any specific problems, please either write to us at the Toronto office or contact your nearest Representative. We will be glad to help whenever we can.

Table of Contents

A

Air Heating, 39, 68
Air Venting, 112
Autoclaves, 90

B

backpressure, 116
Baseboard Units, 27
Batch Type Canning Retorts, 85
Blast Coils, 19

C

Calendars and Ironers, 81
Central Systems and Unit Systems, 17
Closed Type Evaporators, 75
Coil-heated Canning Retorts, 87
collecting leg, 109
Collecting Legs, 108
Combinations of evaporation and cooking, 40
Condensate, 109, 115
Condensate load, 23, 68
Condensation in Engine Cylinders and Turbine Casings, 101
Condensation in Steam Supply Mains, 103
Convectors, 27
Cooking, 40
Cooking with Steam, 85

D

Designing Pipe Coils, 49
DISTILLATION, 71
Drying Presses, 97

E

EDR, 24, 25, 26, 27, 33
Evaporation, 39, 70
Extended Surface-Heating Elements or Finned Tube Units, 28

F

Film Evaporators, 75
Finned tubing, 28
Fixed (non-tilting) Production Pans, 91
Flash Steam., 120
Float-Thermostatic Traps, 117

H

Heat treatment, 40
Heating Equipment, 19
HEATING SYSTEM DETAILS, 17
Hollow cast iron or steel panel, 28
Hot Water Heating Systems, 33

I

impulse turbines, 100
Industrial Drying, 78
Installation of Heating Coils, 46
instantaneous heaters, 62
Instantaneous Water Heaters, 54
Inverted Bucket Traps, 118

L

Large Presses, 96
lifts, 16, 119
Liquid Expansion Thermostatic Traps, 117
Log Mean Temperature Difference, 44

O

One-Pipe Gravity System, 9
One-Pipe Vapour System, 10
Open Type Rubber Vulcanizers, 88
Open-Type Evaporators, 74

P

Paper Machines, 78
Parallel Trapping., 111
Preface, 3
Presses, 95
Priming Load, 111

Q

Quick-Boiling Kettles, 93

R

Radiators, 24, 25
reaction turbines, 100
Reciprocating Steam Engines, 99
Rotary Dryers, 80

S

Safety Factors, 113
Sizing Steam Traps for Coil-Heated Tanks, 41
Sizing Steam Traps for Heating Equipment, 32
Small Presses, 95
Steam Absorption Units for Cooling, 34
Steam Distribution, 105
Steam for Heat Treatment, 95
Steam for Power, 98
Steam for Water Heating, 53
STEAM HEATING SYSTEMS, 8
Steam Jacketed Kettles for Evaporation and Cooking, 90
Steam Main Drainage, 105
steam main trapping, 110
Steam Trap Selection, 109
Steam Turbine Drainage, 103
Steam Turbines, 100
Steam-to-Steam Generators, 73
Storage water heaters, 62
Storage Water Heaters, 62
Superheated steam, 36
Supply Mains to Reciprocating Engines, 103
Supply Mains to Steam Turbines, 104
Supply Piping, 17

T

Textile Drying Cans, 80
Thermodynamic Traps, 119
Thermostatic Steam Traps, 116
Thermostatic traps, 16, 116, 117
Tilting Production Pans, 92
trunnion, 94
Two-Pipe Gravity System, 11
Two-Pipe Pressure System, 11
Two-Pipe Vacuum System, 13
Two-Pipe Vapour System, 13

U

Unit Heaters, 28, 30
Unit Ventilators, 31
Uses of Process Steam, 39

V

vacuum breaker, 22
vacuum pump, 16
vacuum system, 16
Valve Chests, 104

W

Washing, 39
Water Cooling of Presses, 97
What Steam Pressure should be Used, 36

Table of Figures

Fig. 1 One - Pipe Gravity System *9*
Fig. 2 Two - Pipe Pressure System *11*
Fig. 3 Two - Pipe Vacuum System *14*
Fig. 4 Pressure Differential *15*
Fig. 5 Blast Coils *19*
Fig. 6 The Danger Zone *21*
Fig. 7 Pressure Controlled By-pass *22*
Fig. 8 Coil Trapping Method *22*
Fig. 9 Pre Heater *23*
Fig. 10 Typical Convector *26*
Fig. 11 Unit Heaters *29*
Fig. 12 Cabinet Unit Heater *31*
Fig. 13 Simplified Absorption cooling System *34*

Fig. 14 Log Mean Temperature Difference 42
Fig. 15 Coil Outlet Through Side 46
Fig. 16 Plating Tank 47
Fig.17 Improper Coil Installation 48
Fig. 18 Instantaneous Water Heater 54
Fig. 19 How the system works 57
Fig. 20 Details of piping of typical diaphragm control valve, a conventional system. 58
Fig. 21 Details of piping of air-controlled, steam-piloted regulator (new cascade system). 59
Fig. 22 Storage Water Heater 62
Fig. 23 Patterson Kelly Compact Water Heater 63
Fig. 24 Proper Trap Position Tank and Exchanger 67
Fig. 25 Continuous Still with Preheater 72
Fig. 26 Steam to Steam Generator 74
Fig. 27 Open Evaporator 74
Fig. 28 Falling Film Evaporator 76
Fig. 29 Climbing Film Evaporator 77
Fig. 30 Rotating Cylinder Drainage 79
Fig. 31 Rotary Dryer Drainage 81
Fig. 32 Multi - Roll Ironer 82
Fig. 33 Ironer air Venting 83
Fig. 34 Batch Type Canning Retort 85
Fig. 35 Canning Retort Piping 87
Fig. 36 Coil Heated Canning Retort 88
Fig. 37 Open Type Rubber Vulcanizer 89
Fig. 38 Steam Jacketed Kettle 90
Fig. 39 Tilting Production Kettle 92
Fig. 40 Quick Boiling Kettle 93
Fig. 41 Tilting Pan with Internal Steam Coil 94
Fig. 42 Multi - Platen Press Parallel Connection 95
Fig. 43 Multi - Platen Press Trapping 96
Fig. 44 Turbine Inlet & Steam Separator 105
Fig. 45 Parallel Trapping of Main Drip 112
Fig. 46 Parallel Trapping of Main Drip 112
Fig. 47 Draining & Air Venting Terminal End of Main 113

Tables

Table 1 Correction Factors 25
Table 2 Log Mean Temperature Difference Table For A Δ T of 100°F 45
Table 3 Heat Transfer Rate 51
Table 4 Final Temperature Factors 52
Table 5 Factors 52
Table 6 Cu Factors 52
Table 7 Size Comparison 60
Table 8 Heat Radiation Factors 69
Table 9 Start Up Loads 107
Table 10 Flash Tank Sizing 122